TOWN OF MALABAR
PLANNING AND ZONING ADVISORY BOARD
REGULAR MEETING
WEDNESDAY AUGUST 24, 2011
7:30 PM
MALABAR COUNCIL CHAMBER
2725 MALABAR ROAD
MALABAR, FLORIDA

AGENDA

A. CALL TO ORDER, PRAYER AND PLEDGE
B. ROLL CALL
C. ADDITIONS/DELETIONS/CHANGES

D. CONSENT AGENDA :

1. **Approval of Minutes** Planning and Zoning Meeting – 08/10/2011
   (Minutes Available 8/22/2011)
   Exhibit: Agenda Report No. 1
   Recommendation: Motion to Approve

E. PUBLIC HEARING: none

F. ACTION:

2. **Internet Cafes Defined and Regulated (Ord. 2011-48)**
   Exhibit: Agenda Report No. 2
   Recommendation: Action

G. DISCUSSION:

3. **Morris Smith, P.E. Town Engineer- Requirements for Site Plans as they relate to Excavation and Ponds less than ¼ acre of water surface area**
   Exhibit: Agenda Report No. 3
   Recommendation: Discussion

4. **Recreational Vehicles & Trailers in front yards of-Residential Zoning**
   Exhibit: Agenda Report No. 4
   Recommendation: Discussion

5. **Continue Discussion of "Light Industrial"**
   Exhibit: Agenda Report No.5
   Recommendation: Discussion

6. **Continue to Work on Requirements for Assisted Living**
   Exhibit: Agenda Report No. 6
   Recommendation: Discussion

H. PUBLIC:
I. OLD BUSINESS/NEW BUSINESS:
J. ADJOURN

NOTE: THERE MAY BE ONE OR MORE MALABAR ELECTED OFFICIALS ATTENDING THIS MEETING.

If an individual decides to appeal any decision made by this board with respect to any matter considered at this meeting, a verbatim transcript may be required, and the individual may need to insure that a verbatim transcript of the proceedings is made (Florida Statute 286.0105). The Town does not provide this service in compliance with the Americans with Disabilities Act (ADA), anyone who needs a special accommodation for this meeting should contact the Town's ADA Coordinator at 321-727-7764 at least 48 hours in advance of this meeting.

TOWN OF MALABAR

PLANNING AND ZONING

AGENDA ITEM REPORT

AGENDA ITEM NO: 1
Meeting Date: August 24, 2011

Prepared By: Denine M. Sherear, Planning and Zoning Board Secretary

---

SUBJECT: Approval of minutes

BACKGROUND/HISTORY:

The minutes must reflect the actions taken by the Board:

- Who made the Motion
- What is the motion
- Who seconded the motion
- What was the vote

Malabar has historically included discussion to provide the reader the understanding of how the Board came to their vote. It is not verbatim and some editing is done to convey the thought. People do not speak the way they write.

ATTACHMENTS:
Draft minutes of P&Z Board Meeting of August 10, 2011 **(Available Monday August 22, 2011)**

ACTION OPTIONS:
Secretary requests approval of the minutes.

TOWN OF MALABAR

PLANNING AND ZONING

AGENDA ITEM REPORT

AGENDA ITEM NO: 2
Meeting Date: August 24, 2011

Prepared By: Denine M. Sherear, Planning and Zoning Secretary

---

SUBJECT: Internet Cafes Defined and Regulated (Ord 2011-48)

BACKGROUND/HISTORY:

This ~~Ordinance 2011-45~~ was changed to a new number, the corrected number is **Ordinance 2011-48**.
This Ordinance 2011-48 went before P & Z Board at the last meeting on 8/10/2011. There were corrections made and now is back before P & Z to review and forward to Council for recommendation.

.
This Ordinance was originally drafted by the Attorney to follow direction of Council to provide a clear definition of this use. They also wanted to further regulate these uses by requiring a Conditional Use Permit.

ATTACHMENTS:

- Ordinance 2011-48 **(revised 8/10/2011)**

ACTION OPTIONS:
Staff requests consensus regarding "access required to street" and staff will move forward with advertising for a Public Hearing on Ordinance 2011-48.

ORDINANCE NO. 2011-48 (REVISED 07/29/2011)(PZ revised 8/10/2011)

AN ORDINANCE OF THE TOWN OF MALABAR, BREVARD COUNTY, FLORIDA; AMENDING THE TOWN'S LAND DEVELOPMENT CODE; AMENDING SECTION 1-2.6.C. 3, LAND USE CLASSIFICATIONS; PROVIDING FOR AMUSEMENT ARCADE CENTERS AND ELECTRONIC GAMING ESTABLISHMENTS AS A CONDITIONAL USE IN THE CG (COMMERCIAL-GENERAL) ZONING DISTRICT; AMENDING TABLE 1-3.2; ESTABLISHING AMUSEMENT ARCADE CENTERS AND ELECTRONIC GAMING ESTABLISHMENTS AS A CONDITIONAL USE IN THE CG (COMMERCIAL-GENERAL) ZONING DISTRICT; AMENDING TABLE 1-6.1 (B) MAKING PROVISIONS FOR AMUSEMENT ARCADE CENTERS AND ELECTRONIC GAMING ESTABLISHMENTS; AMENDING ARTICLE XX RELATING TO LANGUAGE AND DEFINITIONS; PROVIDING FOR SEVERABILITY; PROVIDING FOR REPEAL; PROVIDING FOR CODIFICATION; PROVIDING AN EFFECTIVE DATE.

NOW, THEREFORE, BE IT ORDAINED BY THE TOWN COUNCIL OF THE TOWN OF MALABAR, BREVARD COUNTY, FLORIDA, as follows:

Section 1. Sections 1-2.6.C.3 is hereby amended to read as follows:

"3. Commercial Amusement, enclosed. Active or passive recreation facilities by profit oriented firms where all activities are conducted within fully enclosed facilities.

Section 2. Table 1-3.2 of Section 1-3.2 of the Malabar Land Development Code is amended as follows:

		RR -65	RS -21	RS-15	RS-10	RM-4	RM-6	R-MH	OI	CL	CG	R/LC	IND	INS	CP
COMMERCIAL ACTIVITIES															
	ENCLOSED COMMERCIAL AMUSEMENT										P				
	GAMING ESTABLISHMENT										C2				

2. Any Gaming Establishments as defined by F.L. Statue 849 shall only be approved as a conditional use in accordance with Article VI of the Malabar Land Development Code.

Section 3. Table 1-6.1(B) is hereby amended to provide for Amusement Arcade Centers and Electronic Gaming Establishments to read as follows:

Conditional Land Uses	Minimum Size Site	Minimum Width/ Depth (feet)	Access Required to Street	Building Setback from Residential District/Nonresidential District (feet)	Parking Lot Setbacks from Adjacent Residential District/ Nonresidential District (feet)	Perimeter Screening Residential District/ Nonresidential District (5)	Curb Cut Controls
Enclosed Commercial Amusement And Gaming Establishment	1 Acre	120	Highway 1 and Babcock Street only	100/30	N/A	Type A/C	(7)

Section 4. Article XX of the Malabar Land Development Code is amended to change the definition of "Commercial amusement, Enclosed" to read as follows:

"*Commercial Amusement, Enclosed.* A commercial amusement establishment, the operations of which are conducted entirely within the confines of an enclosed building or structure, excluding necessary off-street parking facilities. This definition includes, but is not limited to, the following: bowling alleys, billiard and pool establishments, skating rinks, video arcades, gaming establishments, and indoor theaters."

Section 5. Severability. In the event a court of competent jurisdiction shall hold or determine that any part of this ordinance is invalid or unconstitutional, the remainder of this ordinance shall not be affected and it shall be presumed that the Town Council, of the Town of Malabar, did not intend to enact such invalid or unconstitutional provision. It shall be further assumed that the Town Council would have enacted the remainder of this ordinance without said invalid and unconstitutional provision, thereby causing said remainder to remain in full force and effect.

Section 6. Repeal. All other ordinances or resolutions to the extent that conflict with this ordinance are hereby expressly repealed.

Section 7. Codification. The provisions of this ordinance shall become part of the land development code of the Town of Malabar.

Section 8. This Ordinance shall become effective immediately upon its adoption.

The foregoing Ordinance was moved for adoption by Council member _____. The motion was seconded by Council member _____ and, upon being put to a vote, the vote was as follows:

Council Member, Carl Beatty _____
Council Member, David White _____

Council Member, Steven (Steve) Rivet _____
Council Member, Jeffrey (Jeff) McKnight _____
Council Member, Marisa Acquaviva _____

This ordinance was then declared to be duly passed and adopted this ____day of _____, 2011.

_____
Town Of Malabar
By Mayor Tom Eschenberg

First Reading _____
Second Reading_____

ATTEST:
By _____
Debby K. Franklin, C.M.C.
Town Clerk/Treasurer

(Seal)

Approved as to form and content:

_____
Karl W. Bohne, Jr., Town Attorney

TOWN OF MALABAR

PLANNING AND ZONING

AGENDA ITEM REPORT

AGENDA ITEM NO: 3
Meeting Date: August 24, 2011

Prepared By: Denine Sherear, P&Z Board Secretary

SUBJECT: Morris Smith, Town Engineer Discusses Requirements for Site Plan as related to Excavation and Ponds < ¼ acre of water surface area

---

BACKGROUND/HISTORY:

The Town Engineer, Morris Smith is coming before this Board to clarify and discuss the requirements related to excavation and ponds < ¼ acre of water surface

ATTACHMENTS:

- Article VII-Site Plan Review-6 pages
- Morris Smith- Town Engineer Templates for gauging 1,000 Sq Ft-4 pages
- General Provisions-Section1-5.27.Ponds-8 pages
- Ordinance No.03-12- 8 pages
- Malabar Code Preamble –Section 1-1.6.

ACTION OPTIONS:
Discussion to clarify requirements for Site Plan, Excavation and Ponds < ¼ acre

Article VII

SITE PLAN REVIEW

Section 1-7.1. Applicability and filing procedure.

Site plan approval, as provided for herein shall be required for each of the following:

1. All permitted uses, except single family homes or single family home accessory structures. However, all uses and structures shall comply with surfacewater management criteria of Article VIII.
2. All conditional uses.
3. Any use or change in use resulting in one thousand (1,000) square feet of impervious surface area on the entire site.
4. The provisions of Article VIII: Surface Water Management shall apply to all site plans as if the same were incorporated in this Article.
5. Any development including single family residences which will involve any clearing, grading or other form of disturbing the land by the movement of earth provided that any one of the following descriptions applies to said movement.
   (a) Excavation, fill or any combination thereof which will exceed five hundred (500) cubic yards.
   (b) Fill which will exceed three (3) feet in vertical depth at its deepest point as measured from the natural ground surface.
   (c) Excavation which will exceed four (4) feet in vertical depth at its deepest point as measured from the natural ground surface.
   (d) Excavation, fill or any combination thereof which will exceed an area of one thousand (1,000) square feet.
   (e) Plant and/or tree cover is to be removed from an area exceeding one thousand (1,000) square feet on any parcel of land.
   (f) Whenever any amount of excavation or fill is proposed within one hundred (100) feet of a stream, stream channel or body of water a soil erosion and sedimentation control plan shall be provided.

A. *General Site Plan Review Procedure.* In all cases requiring site plan review, no structure or parking area, or part thereof, shall be erected or used, or land or water used, or any change of use consummated, nor shall any building permit be issued therefor, unless a site plan for such structure or use shall have been reviewed by the Town Planning and Zoning Board.

1. *Filing.* Before such site plan shall be approved, an application for such approval shall be filed with the Town Clerk then directed to the Building Official and/or the Town Engineer or other designated officials for their recommendation. Town Engineer is defined as that Town employee, or outside Florida registered engineer contracted by

the Town, responsible for performing the duties specified herein as the Town Engineer.

2. *Application, Fee and Disclosure of Ownership.* Such application shall be in a form substantially in accordance with the form prescribed by the Town Clerk, copies of which may be obtained from the Town Clerk's office. A written power of attorney authorizing a person other than the owner(s) to sign such application must be attached to said application.

   All applications shall include a verified statement showing each and every individual person having a legal and/or equitable ownership interest in the property upon which the application for site plan approval is sought, except publicly held corporations, in which case the name and address of the corporation and principal executive officers will be sufficient.

   The fee schedule for site plan review shall be as determined by resolution of the Town Council.

3. *Review by Town Staff and Planning and Zoning Board.* The application shall be forwarded to the Building Official or Town Engineer and such other staff as may be pertinent. The Town shall proceed to make appropriate studies and/or reviews required to make an appropriate evaluation. The application with evaluative comment shall then be forwarded to the Town Planning and Zoning Board for their consideration and action. The site plan review process shall be carried out in accordance with procedures established by the Planning and Zoning Board, so as to prevent inconvenience and delay to the project.

   After reviewing a site plan and staff recommendations, the Planning and Zoning Board shall recommend approval or disapproval. The Planning and Zoning Board shall provide written comments documenting any conditions of approval. If site plan is recommended for disapproval, the Planning and Zoning Board shall specify in writing the reasons for recommending denial. All recommendations of the Planning Board together with the written record shall be forwarded to the Town Council for final action.

4. *Action by the Town Council.* The Town Council shall consider the recommendations of staff and the Planning and Zoning Board and approve with or without conditions, or disapprove the site plan. The Town Council may attach to its approval of a site plan any reasonable conditions, limitations or requirements which are found necessary, in its judgement, to effectuate the purpose of this Section and carry out the spirit and purpose of the Zoning Ordinance.

   Any condition shall be made a written record and affixed to the site plan as approved. If the Town Council disapproves a site plan, the reasons shall be stated in writing and the appeal shall be to the Court of appropriate jurisdiction.

B. *Review of Minor Site Plans.*

1. *Applicability.* For the purposes of this section, minor site plans shall include the following:

   a. Residential projects comprised of a single building, having less than five (5) dwelling units, or:
   b. Projects containing less than one thousand (1,000) square feet of new impervious surface area.
   c. Single family homes and accessory buildings or ponds which require site plan approval pursuant to section 1-7.1.5.

2. *Submission Requirements for Minor Site Plans.* Minor site plans shall only include that information required in Sections 1-7.2, 1-7.3, which is determined to be applicable to the proposed minor site plan by the Building Official and Town Engineer.

3. *Minor Site Plan Review Procedures.* All minor site plan applications shall be reviewed by the Town Engineer and Building Official and approved by the Building Official, the Planning and Zoning Board and the Chairperson of the Town Council. However, single family homes, accessory buildings or ponds may be approved by the Building Official. Appeals of such decisions shall be conducted pursuant to section 1-7.4

C. *Minor Modifications of Site Plans.* Minor modifications to approved site plans shall include changes such as the:

1. Addition of awnings, canopies or other ornamental structures; redesign and different location of pools, parking spaces, drives and driveways; or modifications in stairs or elevations of decks, porches, terraces and fencing;

2. Addition of parking spaces not to exceed twenty-five (25) percent, including fractions thereof, of the total number of existing parking spaces or five (5) spaces, whichever is the greater amount;

3. Attached or detached additions to buildings which do not increase the floor area in excess of five hundred (500) square feet;

4. Installation of utility system improvements including buildings not exceeding two hundred (200) square feet.

5. Aside from minor modifications to site plans as herein defined, any change in use of buildings, structures, land or water, or institutions of new uses, or alteration or major improvements to existing structures, or erection of new buildings or structures shall require a new site plan submittal in accordance with all procedures and provisions of this Code.

Such changes to approved site plans shall be reviewed by the Building Official and or other designated Town consultants/Staff. If the Building Official and Town Engineer have no objection to the request based on its compliance with the Code, such minor modifications shall be submitted for approval by the Town Council Chairperson after review by the Planning and

Zoning Board. The Town Council Chairperson shall report each change so approved to the Town Council for the record at the next scheduled meeting.

D. *Conformance with Zoning Regulations Required.* Any such building, structure or use shall be erected, altered, installed and maintained in full conformity with the provisions of the zoning ordinance and the approved site plan.
(Ord. No. 91-1, 3-19-91)

Section 1-7.2. Considerations in reviewing site plans.

The Planning and Zoning Board shall not approve a site plan unless a finding is made that such site plan conforms to all applicable provisions of the land development regulations.

A. *Site Location and Character of Use.* The Comprehensive Plan together with the land development regulations, including size and dimension regulations, general provisions, performance standards, and the list of permitted and conditional uses, off-street parking, landscaping, required open spaces, yards and building setbacks shall collectively be the principal guides in determining the suitability of the location of the proposed use.

B. *Appearance of Site and Structures.* The appearance of site and structures shall be coordinated for the purpose of creating a pleasing and harmonious overall environment. The choice of building materials, plant materials, lighting and other building and site improvements shall be commensurate with the objectives of the subject use without generating adverse visual impact on surrounding properties or transportation corridors. Architectural style or design is not restricted. Evaluation of the appearance of a project shall be based on the quality of its overall design and relationship to the impacted area considering the following factors:

1. *Harmonious Overall Design.* The exterior of buildings and structures including mass, facade and materials shall be in harmony with the site and the general character of the impacted area and shall not be gaudy or garish. Awnings or ornamental features shall be designed in a manner harmonious with the building design and shall be of appropriate scale, shape, and pattern in order to reinforce good design principles. Similarly, awnings or ornamental features shall not use incompatible or extraordinary scale, shapes, color schemes, patterns or other extraordinary features for purposes of attracting attention. The appearance of buildings and structures shall be disapproved under Section 1-7.2(B) in extreme cases only and reasonable doubt shall be resolved in favor of the applicant.
2. *Location and Screening of Mechanical Equipment, Utility Hardware and Waste Storage Areas.* Mechanical equipment or other utility hardware other than antennas and stacks on roofs shall be harmonious with the building or they shall be located and/or screened so as not to be visible from any public ways within the impacted area. Similarly, refuse and waste storage areas shall be screened from adjacent properties and public ways by appropriate fences, walls or hedges. In cases where dumpsters must be located in areas highly visible from any public

right-of-way, the Town Planning and Zoning Board shall be authorized to require appropriate vegetative or structural screening to shield an unsightly condition.

3. *Commercial and Industrial Activities Conducted in Enclosed Buildings.* All businesses, services or manufacturing or processing shall be conducted within completely enclosed buildings. If the Town Council determines that a demonstrated necessity exists for outside storage or display due to the impracticality and unreasonableness of enclosure of such services, storage and display areas, in such case such service, storage and display areas or yards shall be screened by a continuous fence or wall or by landscaping and berm system so as to provide a ninety (90) percent opaque screen with a minimum height of five (5) to eight (8) feet, unless the same is demonstrated by the applicant to the Town Council's satisfaction to be impractical and unreasonable.
4. *Exterior Lighting.* Exterior lighting shall be provided and shall be so arranged as to shield or deflect the light from adjoining properties and public streets.

C. *Access, Internal Circulation, Off-Street Parking and Other Traffic Impacts.* The Town Building Official and/or designated staff shall advise on matters related to this subsection 1-7.2(C):

1. *Internal Circulation System Design and Access/Egress Considerations.* Driveways, curb cuts, and areas for the parking and internal circulation of vehicles shall be located, designed and controlled so as to provide for safe and convenient

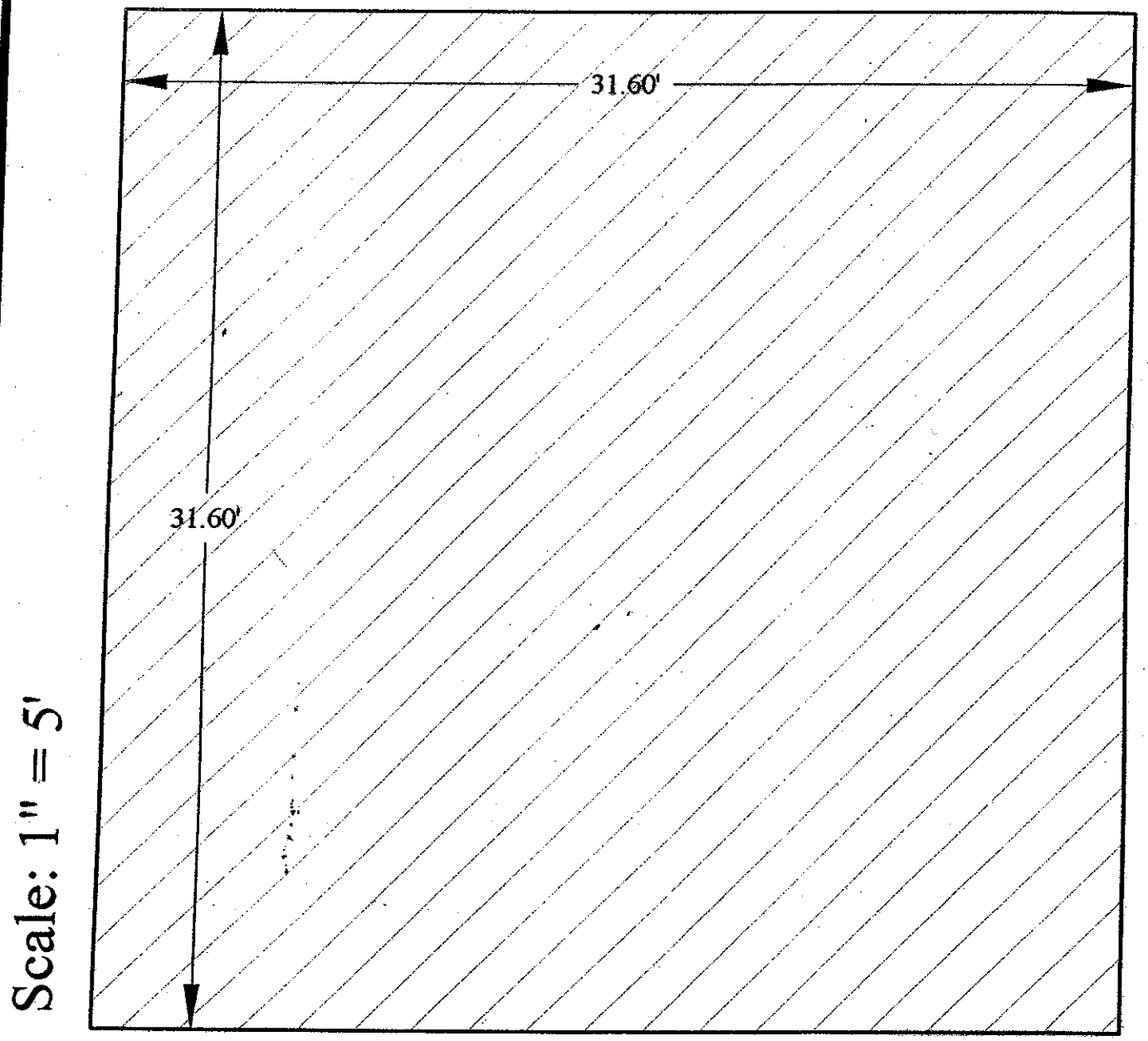

JAMES MORRIS SMITH, JR.
Professional Engineer
Professional Surveyor & Mapper

CIVIL ENGINEERING
LAND DEVELOPMENT PERMITTING
GEOGRAPHICAL INFORMATION SYSTEMS
LAND SURVEYING

1754 Barker Street NE
Palm Bay, Florida 32907
(321) 745-0234 Voice-Cell
(321) 723-2371 Fax
morris@morrissmitheng.com

Original Drawing Issue Date: 04-21-10

REVISIONS:

No.	Date	Description	By
1.			
2.			
3.			
4.			

Town of Malabar

2725 Malabar Road
Town of Malabar, FL 32950

Templates
for
Gauging 1,000 square feet
Areas
Checking to Qualify for Site Plan
Per Article XII Sec.1-7.1.5.(d)

James Morris Smith, Jr., P.E.
Florida Registration No. 45392

Project No.	10-04-852
Drawn By:	JMS
Designed By:	JMS
Checked By:	JMS
Drawing Scale:	See Exhibits

Sheet 1 of 4

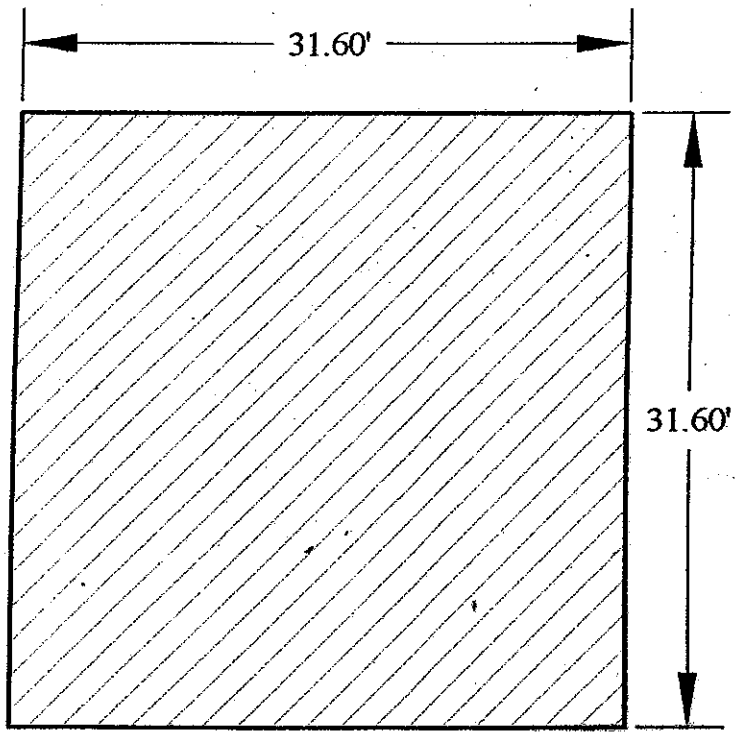

Scale: 1" = 10'

JAMES MORRIS SMITH, JR.
Professional Engineer
Professional Surveyor & Mapper

CIVIL ENGINEERING
LAND DEVELOPMENT PERMITTING
GEOGRAPHICAL INFORMATION SYSTEMS
LAND SURVEYING

1754 Barker Street NE
Palm Bay, Florida 32907
(321) 745-0234 Voice-Cell
(321) 723-2371 Fax
morris@morrissmitheng.com

Original Drawing Issue Date: 04-21-10

REVISIONS:

No.	Date	Description	By
1.			
2.			
3.			
4.			

Town of Malabar

2725 Malabar Road
Town of Malabar, FL 32950

Templates
for
Gauging 1,000 square feet
Areas
Checking to Qualify for Site Plan
Per Article XII Sec.1-7.1.5.(d)

James Morris Smith, Jr., P.E.
Florida Registration No. 45392

Project No.	10-04-852
Drawn By:	JMS
Designed By:	JMS
Checked By:	JMS
Drawing Scale:	See Exhibits

Sheet 2 of 4

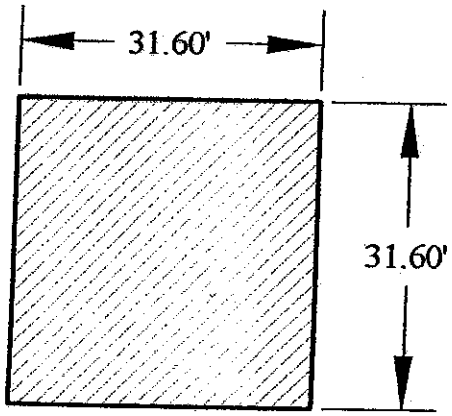

Scale: 1" = 20'

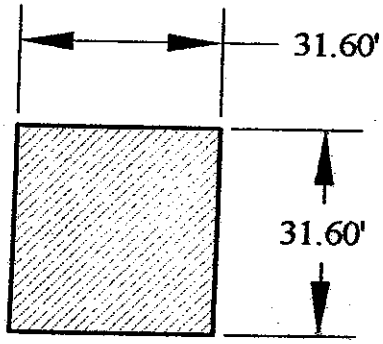

Scale: 1" = 30'

JAMES MORRIS SMITH, JR.
Professional Engineer
Professional Surveyor & Mapper

CIVIL ENGINEERING
LAND DEVELOPMENT PERMITTING
GEOGRAPHICAL INFORMATION SYSTEMS
LAND SURVEYING

1754 Barker Street NE
Palm Bay, Florida 32907
(321) 745-0234 Voice-Cell
(321) 723-2371 Fax
morris@morrissmitheng.com

Original Drawing Issue Date: 04-21-10

REVISIONS:

No.	Date	Description	By
1.			
2.			
3.			
4.			

Town of Malabar

2725 Malabar Road
Town of Malabar, FL 32950

Templates
for
Gauging 1,000 square feet
Areas
Checking to Qualify for Site Plan
Per Article XII Sec.1-7.1.5.(d)

James Morris Smith, Jr., P.E.
Florida Registration No. 45392

Project No.	10-04-852
Drawn By:	JMS
Designed By:	JMS
Checked By:	JMS
Drawing Scale:	See Exhibits

Sheet 3 of 4

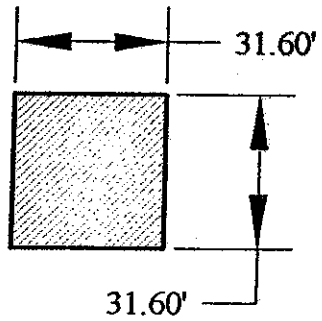

Scale: 1" = 40'

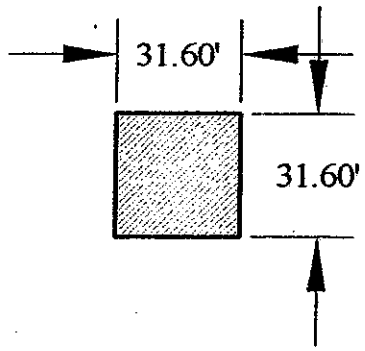

Scale: 1" = 50'

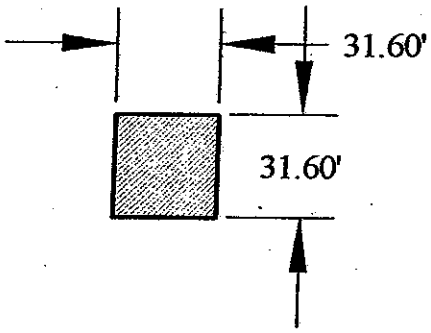

Scale: 1" = 60'

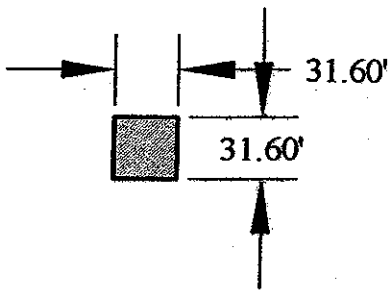

Scale: 1" = 100'

JAMES MORRIS SMITH, JR.
Professional Engineer
Professional Surveyor & Mapper

CIVIL ENGINEERING
LAND DEVELOPMENT PERMITTING
GEOGRAPHICAL INFORMATION SYSTEMS
LAND SURVEYING

1754 Barker Street NE
Palm Bay, Florida 32907
(321) 745-0234 Voice-Cell
(321) 723-2371 Fax
morris@morrissmitheng.com

Original Drawing Issue Date: 04-21-10

REVISIONS:

No.	Date	Description	By
1.			
2.			
3.			
4.			

Town of Malabar

2725 Malabar Road
Town of Malabar, FL 32950

Templates
for
Gauging 1,000 square feet
Areas
Checking to Qualify for Site Plan
Per Article XII Sec.1-7.1.5.(d)

James Morris Smith, Jr., P.E.
Florida Registration No. 45392

Project No.	10-04-852
Drawn By:	JMS
Designed By:	JMS
Checked By:	JMS
Drawing Scale:	See Exhibits

Sheet 4 of 4

- Nursing homes, group homes and adult congregate living facilities.
- Medical laboratories.
- Outdoor repair or storage.
- Rental of any equipment or items.
- Veterinary hospitals.
- Similar uses not strictly in compliance with the provisions of this section.
- Any commercial, industrial, or commercial agricultural use as defined in Section 1-2.6, excepting specific office activities duly approved by the Town Council.

13. Failure to continuously comply with all provisions of this subsection shall be grounds for revocation of the home occupation Business Tax Receipt by the Town Council.

(Ord. No. 92-8, § 1(A), 8-18-92; Ord. No. 08-01, § 3, 3-3-08)

Cross reference—Licenses and business regulations, ch. 10.

Section 1-5.26. Swimming pools.

The following provisions shall be enforced in regulating the location and construction of swimming pools:

1. *Setbacks for swimming pools and pool enclosures.*
   a. There shall be a minimum of ten (10) feet between any lot line and the water's edge of a pool.
   b. There shall be a minimum of five (5) feet between any structure and the water's edge of a pool.
   c. Screen enclosures and/or decking shall be a minimum of four (4) feet from any property line.
   d. No portion of any pool, deck, or screen enclosure may encroach into an easement.
2. *Compliance with other applicable laws.* All swimming pools shall conform to the applicable provisions of the adopted model Swimming Pool Code and the applicable laws and rules of the State of Florida.

(Ord. No. 98-3, § 2, 9-9-98)

Cross reference—Buildings and building regulations, ch. 6.

Section 1-5.27. Ponds.

General provisions. It shall be a violation of this ordinance for any person to construct, or permit to be constructed, or to fill a pond within the Town of Malabar without first obtaining a pond permit from the Town of Malabar.

1. *Pond permit.* Any person wishing to construct or permit to be constructed a pond of one-quarter (1/4) acre in size or greater or to fill a pond of any size within the Town of

Malabar must, as a precondition, obtain a pond permit. Ponds one quarter (1/4) acre or less must meet setback requirements. In order to obtain a pond permit, an applicant must:

A. Pay the designated pond permit application fee prior to the Town accepting any application for a pond permit. The pond permit application fee shall be set by a Resolution of the Town Council;

B. If the applicant desires to construct a pond, the applicant shall provide the following documentation to the Town Clerk as part of the pond permit application;

1. A site plan containing the existing and proposed elevations for the entire project, site, the location of the proposed pond, a survey of the project site, said (survey to contain topographic data), tree locations and a plot plan.

2. Applicant must provide a written estimate of the quantity of fill which is proposed to be excavated, and a plan for disposal of said fill in accordance with this section.

3. Any other documents that shall be required by the Town Engineer for purposes of demonstrating compliance with the performance standards of section 1-5.27.5.A—F and completing a conclusive review of the proposed site.

C. If an applicant desires to fill a pond the applicant shall submit the following:

1. A pond permit application containing, at a minimum the following:

a. A site plan of the existing pond including total area of the surface covered by water; depth of pond; and its proximity to structure;

b. The estimated amount of fill to be used, as well as, the type of fill to be used;

c. Name of contractor performing the fill activity;

d. Any and all other information required by the Town Engineer.

D. The Town Clerk shall not accept an application for a pond permit unless the applicant has submitted an original and two (2) copies of all required documents, and paid all required permit fees.

E. In addition to a pond permit fee required herein the applicant must, apply for and obtain a land clearing permit required by the Town's Code of Ordinances.

2. *Review process.* The following process for review shall apply to all pond permit applications presented to the Town of Malabar for consideration.

A. The review process shall begin when the applicant has submitted to the Town Clerk all required documents as set forth in paragraph 1, where applicable, of this section and all applicable application fees have been paid.

B. Within five (5) working days of the receipt of a completed application and application fee, the Town Clerk shall forward one copy each of the application and

the required documentation to the Town Building Official and the Town Engineer. The Town Building Official shall review the application to insure the completeness and accuracy of the submitted information, and shall notify the Town Engineer of any inaccuracies or incompleteness.

C. The Town Engineer shall review the application and, within two weeks of receipt of the application by the Town Engineer, the Town Engineer shall recommend that the application for a pond permit be;

1. Approved;

2. Approved, subject to certain conditions, or

3. Denied.

D. 1. If the Town Engineer recommends approval of the pond permit application, the application shall be forwarded to the Planning and Zoning Board for their consideration and action on the next available Planning and Zoning Board Agenda. The review procedures in sections 1-7.1 through 1-7.6 to the extent not inconsistent with this section shall apply. The Town Engineer and the Town's Planning and Zoning Board may impose reasonable conditions upon the applicant for a pond permit. Upon consideration and action by the Planning and Zoning Board the matter shall be forwarded to the Town Council for consideration and action. Upon approval by the Town Council of the pond permit application, the Building Official shall issue a pond permit to the applicant. The pond permit, however, shall contain the statement of the conditions which must be met by the applicant as set forth by the Town Engineer, the Planning and Zoning Board, and approved by the Council. Upon acceptance of a pond permit which has stated condition, the applicant agrees to perform all conditions set forth in the pond permit.

2. A pond permit shall not be issued if the Town Engineer recommends denial of the permit.

3. *Appeal process.* If an applicant's permit is denied, or approved with conditions, the applicant shall have the right to appeal such a denial or conditions to the Town Council under the following procedure:

A. An appeal of a decision not to issue a pond permit, or to issue a pond permit upon conditions, may be appealed to Town Council, by the applicant, within ten days of the applicant receiving notice of the denial of his permit or approval with conditions.

B. To appeal a decision to Town Council, the applicant must submit, in writing, a notice to the Town Council of the intention to appeal the decision of the Town Building Official and request the matter to be placed on the Council's agenda. The Notice of Appeal shall contain the basis upon which the appeal is being made.

C. Upon receipt of a timely notice of appeal, the Town Clerk shall set the matter on the Town Council's agenda , said appeal to be heard by Council, within thirty (30) days of the date of notice of appeal. The Town Clerk shall submit all documentation relating to the application and permit to Council for review.

D. The Town Council shall review the issue and determine whether the decision of the Building Official shall be upheld, modified or reversed. All decisions of the Town Council are final.

E. Appeals of decisions of the Town Council may be taken to a court of competent jurisdiction.

4. *Definitions.*

A. *Allowable material* shall mean uncontaminated sand, soil or dirt or other items approved by the Town Engineer. Construction debris and yard waste shall not be considered allowable material.

B. *Conservation elevation (also control elevation).* The lowest elevation at which water can be released through the control device and/or the designed normal water level of the pond.

C. *Construction debris* means material generally considered no to be water soluble and non-hazardous in nature, including but not limited to steel, glass, brick, concrete, asphalt roofing material, pip, gypsum wallboard and lumber, metal, asphalt paving material, from the construction or destruction of a structure as part of a construction or demolition project or from the renovation or maintenance of a structure.

D. *To fill* shall mean the adding of allowable material to alter the existing topography or characteristics of a pond.

E. *Project site.* That area where the pond shall be located and all other affected areas of the property.

F. *Wet season water table.* Elevation of the ground water table during normal wet season conditions as determined by SCS (Soil Conservation Service) or competent engineering studies (referenced to National Geodetic Vertical Datum).

G. *Side slopes.* The ratio between the horizontal and vertical distance of the pond as measured from any point in the pond to the property line or finished floor of any improvement. (See Diagram "A")

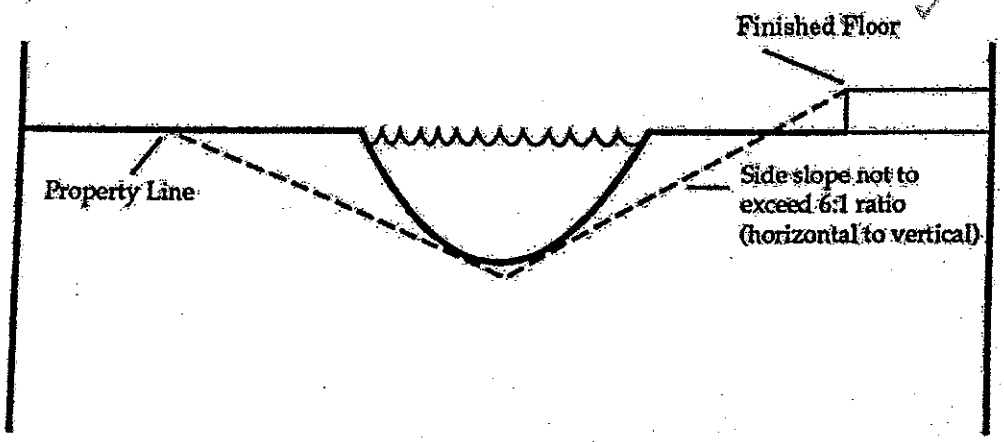

Diagram A

H. *Littoral zone.* That portion of the pond which is less than three (3) feet deep as measured from the conservation elevation.

I. *Pond.* Shall mean any excavation for the purpose of retaining water wherein the surface area is one-quarter (1/4) acre in size or greater. Notwithstanding this definition of pond, all fill activity which reduces the surface area of an existing water body, regardless of size, may only be accomplished after a permit authorizing such activity is issued by the Town.

5. *Performance standards for the construction of a pond.*

A. Setbacks. Setbacks shall be measured from the conservation elevation and shall be set based on the following criteria:

1. Side slopes shall not exceed 6:1 (horizontal to vertical) as measured from existing grade at property lines or finished floor elevation at buildings or structures.

2. The setback from any right-of-way shall comply with the setback requirements of Table 1.3.3(E) of Article III of this Code. The setback in this subsection shall apply to all ponds, whether or not a permit is required for construction of such pond.

3. The setback from any abutting residentially zoned property line shall be forty (40) feet from such abutting property line otherwise setbacks shall be thirty (30) feet from abutting property line. The setback in this subsection shall apply to all ponds, whether or not a permit is required for construction of such pond.

4. The pond and any related site grading shall not adversely affect off-site drainage patterns.

B. Conservation elevation. The proposed design or conservation elevation shall be set at or near the wet season water table. Wells shall not be used to maintain a water level elevation above the seasonal water table and must have float control device installed when there is an outfall. The pond and discharge structure shall not draw the water table below its wet seasonal elevation.

C. No pond, regardless of size and regardless of whether or not a pond permit is necessary shall be greater than twelve (12) feet in depth as measured from the conservation elevation to the deepest point.

D. Littoral zone. A minimum of thirty (30) percent of the pond area shall be littoral zone and shall be planted with suitable wetland vegetation.

E. Disposal of excavated material. All excavated topsoil shall be disposed of on-site. All other excavated material, unless otherwise provided for herein, shall be disposed of on-site. Off-site disposal of excavated material, except topsoil, shall be permitted under the following conditions:

1. The pond has a total surface acreage of less than one-quarter (¼) acre;

2. For any pond for which a pond permit is required the excavated material may be disposed of off-site if a certification is presented to the Town by a Florida licensed professional engineer stating that the excavated material, except topsoil, can not be utilized on-site. In submitting the certification the engineer shall take the following into consideration:

   a. The size of the site.

   b. Available on-site retention.

   c. The impact of on-site disposal will have on adjoining properties.

   d. No excavated material from a pond which one-quarter acre or larger in size may be sold; offered for sale or trade or bargained for anything of value.

3. Excavated material which is unsuitable for use on the site because of high organic content (muck) may be disposed of off-site if approved by the Town Engineer.

F. Discharge structures shall be designed to limit the maximum discharge rate to the pre-development discharge rate. The discharge velocity shall be controlled so as to not erode or cause scouring of existing or proposed facilities. Structures shall only discharge to a point of legal positive out-fall.

6. *Completion.*

A. Pond permit issued pursuant to this section shall be effective for a period of six (6) months from the date of issue.

B. An extension may only be granted once upon good cause after review and approval by the Town Building Official.

C. Refusal by the Town Building Official to issue a pond permit extension may be appealed to Town Council in the same manner set forth in paragraph 3 of the section.

7. *Failure to complete.*

A. A fine up to two hundred fifty dollars ($250.00) per day may be assessed against any applicant who fails to complete a pond within the six-month period of the permit.

B. Further, the Town, at its discretion, may require the applicant to restore the land to the condition prior to obtaining a pond permit if the pond is not completed within the allotted time.

C. It shall be the obligation of the applicant to notify the Town of completion. The pond shall be complete only after a final inspection by the Town Building Official.

8. *Standards for fill activities.*

A. No pond shall be filled if, in the opinion of the Town Engineer, the filling of the pond will adversely effect on and off-site drainage; promotes soil erosion on or off-site; or adversely affects the natural environment.

B. Before any pond shall be filled, approval from outside governmental agencies having jurisdiction over filling of water bodies must be submitted to the Town.

(Ord. No. 91-1, 3-19-91; Ord. No. 03-12, § 1, 12-1-03)

Sec. 1-5.28. Site lighting.

(a) *Purpose.* The purpose of this ordinance is to provide a regulatory strategy for outdoor lighting that will:

A. Permit reasonable uses of outdoor lighting for night-time safety, utility, security, productivity and enjoyment;

B. Curtail and reverse the degradation of the night-time visual environment and the night sky; and

C. Preserve the rural nature of the Town by minimizing glare, obtrusive light, and artificial sky glow by limiting outdoor lighting that is misdirected, excessive, or unnecessary;

D. Conserve energy and resources; and

E. Help protect the natural environment from the damaging effects of night lighting from man made sources.

(b) *Applicability.* Unless otherwise exempted under section 1.5.30, this section shall apply to all street lights, security lights, building lights, spot lights and all other lighting or modes of illumination that are installed in the residential, commercial, industrial and institutional zoning districts of the Town. All such lighting is hereby collectively referred to as "site lighting."

(c) *Exemption.* The following luminaries and lighting systems are exempt from these requirements:

1. Internally illuminated signs;
2. Externally illuminated signs, except billboards, that do not exceed 4000 lumens;
3. Temporary lighting for building, construction, special events, and holiday lighting;
4. Lighting in swimming pools;
5. Code required exit signs;
6. Code required lighting for stairs and ramps;
7. Lighting required and regulated by the Federal Aviation Administration, U.S. Coast Guard, or other federal or state agency.
8. Interior lighting of structures;
9. Municipally owned or maintained street lighting;
10. Any pole mounted lighting where the pole, and light fixture do not exceed six (6) feet in height measured from the ground and the light bulb does not exceed one hundred (100) watts of incandescent lighting.
11. Lighting that is used to illuminate the display of the American flag.
12. Any lawful commercial business existing prior to January 12, 2006 which does not abut any residential district is hereby exempted from the requirements of section 1-5.31(vi) of this Code, provided, however, that site lighting on such a commercial business establishment is required to comply with the shielding requirements of section 1-5.31 of this Code.

(d) *Site lighting.*

1. All site lighting, whether pole-mounted or building-mounted shall be designed and installed to avoid direct glare, interference with vehicular traffic or cause interference with abutting property owners. In addition all site lighting must meet the following:
   - (i) Site lighting, including lighting on billboards, shall either be down lit, shaded or shielded to prevent back lighting;
   - (ii) Site lighting shall not be directed onto any abutting property;
   - (iii) No site lighting in any residentially zoned district shall exceed 0.2 lux onto any adjacent property;
   - (iv) Shielding shall be accomplished with the installation of an opaque shield;
   - (v) Shielding and any structural part providing the shielding must be permanently affixed;
   - (vi) No site lighting in any commercial, industrial or institutional zoning district shall exceed 0.2 lux onto any adjacent property.

ORDINANCE NO. 03-12

AN ORDINANCE OF THE TOWN OF MALABAR, BREVARD COUNTY, FLORIDA; AMENDING ARTICLE V OF THE LAND DEVELOPMENT CODE OF THE TOWN; AMENDING SECTION 1-5.27 RELATING TO POND PERMITS; PROVIDING FOR A PERMIT FOR PONDS ONE-QUARTER ACRE IN SIZE OR GREATER; PROVIDING THAT ALL APPLICATIONS FOR POND PERMITS SHALL BE REVIEWED BY THE TOWN'S PLANNING AND ZONING BOARD; PROVIDING FOR SITE PLAN REVIEW; PROVIDING FOR DEFINITIONS; PROVIDING FOR DISPOSAL OF EXCAVATED MATERIAL; PROVIDING FOR THE GRANTING OF AN EXTENSION FOR CONSTRUCTION OF POND PERMIT; PROVIDING FOR STANDARDS FOR POND CONSTRUCTION AND THE FILLING OF PONDS; PROVIDING FOR REPEAL; PROVIDING FOR SEVERABILITY; PROVIDING FOR INCORPORATION INTO THE CODE OF ORDINANCES; AND PROVIDING AN EFFECTIVE DATE.

NOW, THEREFORE, BE IT ORDAINED BY THE TOWN COUNCIL OF THE TOWN OF MALABAR, BREVARD COUNTY, FLORIDA, as follows:

Section 1. Article V, Section 1-5.27.1 is amended to read as follows:

"*General Provisions.* It shall be a violation of this ordinance for any person to construct, or permit to be constructed, or to fill a pond within the Town of Malabar without first obtaining a Pond Permit from the Town of Malabar.

1. *Pond Permit.* Any person wishing to construct or permit to be constructed a pond of one-quarter acre in size or greater or to fill a pond of any size within the Town of Malabar must, as a precondition, obtain a Pond Permit. Ponds one quarter (1/4) acre or less must meet setback requirements. In order to obtain a Pond Permit, an applicant must:

   A. Pay the designated Pond Permit Application fee prior to the Town accepting any application for a Pond Permit. The Pond Permit Application Fee shall be set by a Resolution of the Town Council;

   B. If the applicant desires to construct a pond, the applicant shall provide the following documentation to the Town Clerk as part of the Pond Permit Application;

      1. A site plan containing the existing and proposed elevations for the entire project, site, the location of the proposed pond, a survey of

C. The Town Engineer shall review the application and, within two weeks of receipt of the application by the Town Engineer, the Town Engineer shall recommend that the application for a Pond Permit be;

1. approved;
2. approved, subject to certain conditions, or
3. denied.

D. 1. If the Town Engineer recommends approval of the Pond Permit application, the application shall be forwarded to the Planning and Zoning Board for their consideration and action on the next available Planning and Zoning Board Agenda. The review procedures in Section 1-7.1 through 1-7.6 to the extent not inconsistent with this Section shall apply. The Town Engineer and the Town's Planning & Zoning Board may impose reasonable conditions upon the applicant for a Pond Permit. Upon consideration and action by the Planning & Zoning Board the matter shall be forwarded to the Town Council for consideration and action. Upon approval by the Town Council of the Pond Permit Application, the Building Official shall issue a Pond Permit to the applicant. The Pond Permit, however, shall contain the statement of the conditions which must be met by the applicant as set forth by the Town Engineer, the Planning & Zoning Board, and approved by the Council. Upon acceptance of a Pond Permit which has stated condition, the applicant agrees to perform all conditions set forth in the Pond Permit.

2. A Pond Permit shall not be issued if the Town Engineer recommends denial of the permit.

3. *Appeal Process.* If an applicant's permit is denied, or approved with conditions, the applicant shall have the right to appeal such a denial or conditions to the Town Council under the following procedure:

A. An appeal of a decision not to issue a Pond Permit, or to issue a pond permit upon conditions, may be appealed to Town Council, by the applicant, within ten days of the applicant receiving notice of the denial of his permit or approval with conditions.

B. To appeal a decision to Town Council, the applicant must submit, in writing, a notice to the Town Council of the intention to appeal the decision of the Town Building Official and request the matter to be placed on the Council's agenda. The Notice of Appeal shall contain the basis upon which the appeal is being made.

C. Upon receipt of a timely notice of appeal, the Town Clerk shall set the matter on the Town Council's agenda , said appeal to be heard by Council, within thirty (30) days of the date of notice of appeal. The Town Clerk shall submit all documentation relating to the application and permit to Council for review.

D. The Town Council shall review the issue and determine whether the decision of the Building Official shall be upheld, modified or reversed. All decisions of the Town Council are final.

E. Appeals of decisions of the Town Council may be taken to a court of competent jurisdiction.

4. *Definitions.*

A. Allowable material shall mean uncontaminated sand, soil or dirt or other items approved by the Town Engineer. Construction debris and yard waste shall not be considered allowable material.

B. Conservation Elevation (also control elevation) – The lowest elevation at which water can be released through the control device and/or the designed normal water level of the pond.

C. Construction debris means material generally considered no to be water soluble and non-hazardous in nature, including but not limited to steel, glass, brick, concrete, asphalt roofing material, pip, gypsum wallboard and lumber, metal, asphalt paving material, from the construction or destruction of a structure as part of a construction or demolition project or from the renovation or maintenance of a structure.

D. To fill shall mean the adding of allowable material to alter the existing topography or characteristics of a pond.

E. Project Site – That area where the pond shall be located and all other affected areas of the property.

F. Wet Season Water Table – Elevation of the ground water table during normal wet season conditions as determined by SCS (Soil Conservation Service) or competent engineering studies (referenced to National Geodetic Vertical Datum).

G. Side Slopes – The ratio between the horizontal and vertical distance of the pond as measured from any point in the pond to the property line or finished floor of any improvement. (See Diagram "A")

H. Littoral Zone – That portion of the pond which is less than three (3) feet deep as measured from the conservation elevation.

I. Pond – Shall mean any excavation for the purpose of retaining water wherein the surface area is one-quarter acre in size or greater. Notwithstanding this definition of pond, all fill activity which reduces the surface area of an existing water body, regardless of size, may only be accomplished after a permit authorizing such activity is issued by the Town.

5. *Performance Standards for the Construction of a Pond.*

A. Setbacks – Setbacks shall be measured from the conservation elevation and shall be set based on the following criteria:

1. Side slopes shall not exceed 6:1 (horizontal to vertical) as measured from existing grade at property lines or finished floor elevation at buildings or structures.

2. The setback from any right-of-way shall comply with the setback requirements of Table 1.3.3(E) of Article III of this code. The setback in this subsection shall apply to all ponds, whether or not a permit is required for construction of such pond.

3. The setback from any abutting residentially zoned property line shall be 40 feet from such abutting property line otherwise setbacks shall be 30 feet from abutting property line. The setback in this subsection shall apply to all ponds, whether or not a permit is required for construction of such pond.

4. The pond and any related site grading shall not adversely affect off-site drainage patterns.

B. Conservation Elevation – The proposed design or conservation elevation shall be set at or near the wet season water table. Wells shall not be used to maintain a water level elevation above the seasonal water table and must have float control device installed when there is an outfall. The pond and discharge structure shall not draw the water table below its wet seasonal elevation.

C. No pond, regardless of size and regardless of whether or not a Pond Permit is necessary shall be greater than twelve (12) feet in depth as measured from the conservation elevation to the deepest point.

D. Littoral Zone – A minimum of thirty percent (30%) of the pond area shall be littoral zone and shall be planted with suitable wetland vegetation.

E. Disposal of Excavated Material – All excavated topsoil shall be disposed of on-site. All other excavated material, unless otherwise provided for herein, shall be disposed of on-site. Off-site disposal of excavated material, except topsoil, shall be permitted under the following conditions:

1. The Pond has a total surface acreage of less than one-quarter acre;
2. For any pond for which a Pond Permit is required the excavated material may be disposed of off-site if a certification is presented to the Town by a Florida licensed professional engineer stating that the excavated material, except topsoil, can not be utilized on-site. In submitting the certification the engineer shall take the following into consideration:

    a. The size of the site.
    b. Available on-site retention.
    c. The impact of on-site disposal will have on adjoining properties.
    d. No excavated material from a pond which one-quarter acre or larger in size may be sold; offered for sale or trade or bargained for anything of value.
3. Excavated material which is unsuitable for use on the site because of high organic content (muck) may be disposed of off-site if approved by the Town Engineer.

F. Discharge Structures shall be designed to limit the maximum discharge rate to the pre-development discharge rate. The discharge velocity shall be controlled so as to not erode or cause scouring of existing or proposed facilities. Structures shall only discharge to a point of legal positive out-fall.

6. *Completion.*

A. Pond Permit issued pursuant to this section shall be effective for a period of six months from the date of issue.

B. An extension may only be granted once upon good cause after review and approval by the Town Building Official.

C. Refusal by the Town Building Official to issue a Pond Permit extension may be appealed to Town Council in the same manner set forth in paragraph 3 of the section.

7. *Failure to Complete.*

A. A fine up to $250.00 per day may be assessed against any applicant who fails to complete a pond within the six month period of the permit.

B. Further, the Town, at its discretion, may require the applicant to restore the land to the condition prior to obtaining a Pond Permit if the pond is not completed within the allotted time.

C. It shall be the obligation of the applicant to notify the Town of completion. The pond shall be complete only after a final inspection by the Town Building Official."

8. *Standards for Fill Activities.*

A. No pond shall be filled if, in the opinion of the Town Engineer, the filling of the pond will adversely effect on and off-site drainage; promotes soil erosion on or off-site; or adversely affects the natural environment.

B. Before any pond shall be filled, approval from outside governmental agencies having jurisdiction over filling of water bodies must be submitted to the Town.

Section 2. Repeal

All Ordinances or parts of Ordinances in conflict herewith are hereby repealed and all Ordinances or parts of Ordinances not in conflict herewith are hereby continued in full force and effect.

Section 3. Severability

In the event a court of competent jurisdiction shall hold or determine that any part of the this ordinance is invalid or unconstitutional, the remainder of the is Ordinance shall not be effected and it shall be presumed that the Town Council, Town of Malabar did not intend to enact such invalid or unconstitutional revision. It shall further be assumed that the Town Council would have enacted the remainder of this Ordinance without said invalid and unconstitutional revision, thereby causing said remainder to remain in full force and effect.

Section 4. Incorporation

It is the intention of the Town Council of the Town of Malabar, Brevard County, Florida and it is herby provided that the provisions of this Ordinance shall become and be made a part of the Code of Ordinances of the Town of Malabar.

Section 5. Effective Date

This Ordinance shall become effective immediately upon its adoption.

The foregoing Ordinance was moved for adoption by Council member Crews. The motion was seconded by Council member Rossman and, upon being put to a vote, the vote was as follows:

Council member Jane Havet	absent
Council member Brian Hunter	aye
Council member Steve Rivet	aye
Council member Bobbi Moccia	aye
Council member Bob Rossman	aye

Passed and adopted by the Town Council, Town of Malabar, Brevard County, Florida this 1st day of December, 2003.

Phillip R Crews

Town Of Malabar
By Mayor Phillip R. Crews

First Reading: 11/17/03
Second Reading: 12/01/03

ATTEST:
By Susan Kabana
Susan Kabana, Town Clerk

Approved as to form and content:

Karl W. Bohne, Jr.
Town Attorney

that site shall occur only in conformance with the requirements of this Code or amendment thereto.

Section 1-1.6. Interpretation and conflict.

A. *General Interpretations.* In the interpretation and application of this Code all provisions shall be: (1) considered as minimum requirements; (2) liberally construed in favor of the Town, and; (3) deemed neither to limit nor repeal any other powers granted under state statutes.

B. *Conflicts.* More specific provisions of this Code shall be followed in lieu of more general provisions that may be more lenient than or in conflict with the more specific provision.

Where the provisions of the Code appear to conflict with another law, the most restrictive provision shall govern.

Section 1-1.7. Severability.

If any section, subsection, paragraph, sentence, clause, or phrase of this Code is for any reason held by any court of competent jurisdiction to be unconstitutional or otherwise invalid, the validity of the remaining portions of this Code shall continue in full force and effect.

Section 1-1.8. Repeal.

Upon the effective date of this ordinance, all of Chapters 7; 13—16; and 18—20 as well as any other ordinances of the Code of Ordinances, Town of Malabar, Florida which are in conflict with this Code are hereby repealed and shall be superseded by the provisions of this Code.

Section 1-1.9. Saving clause.

The obligations, restrictions, rights and/or regulations heretofore existing on land located in the corporate limits of the Town of Malabar shall not be impaired, affected or avoided by the adoption of this Code.

Section 1-1.10. Status of Code, prior offenses.

Any prosecution arising from a violation of any ordinance repealed by this ordinance, which prosecution may be pending at the time this Code becomes effective, or any prosecution which may be started within one year after the effective date of this Code as a consequence of any violation of any ordinance repealed therein, which violation was committed prior to the effective date of this Code, shall be tried and determined exactly [as] if such ordinance had not been repealed.

Section 1-1.11. Violations and penalties.

Any person, firm, partnership or corporation violating any of the provisions of this Code shall be deemed guilty of a misdemeanor of the second degree and upon conviction thereof, shall be punished as provided by Section 775.082 or 775.083, Florida Statutes, as exists or as may hereinafter be amended.

Each day that a violation of this Code continues after written notice without compliance shall constitute a separate offense punishable upon conviction.

Section 1-1.12. Codification.

Provisions of this ordinance shall be incorporated in the City Code and the word "ordinance" may be changed to "section," "article," or other appropriate word, and the sections of this ordinance may be renumbered or relettered to accomplish such intention.

Section 1-1.13. Enactment and effective date.

This ordinance shall take effect immediately upon adoption by the Town.

TOWN OF MALABAR

PLANNING AND ZONING

AGENDA ITEM REPORT

AGENDA ITEM NO: 4
Meeting Date: August 24, 2011

Prepared By: Denine Sherear, P&Z Board Secretary

SUBJECT: Discussion of Vehicles & Trailer in Front yards of Residential Zoning

---

BACKGROUND/HISTORY:
The Mayor asked Council if this could be brought to P & Z for consideration. Per the Malabar Code, the parking of recreational vehicles in the front yards is restricted.

ATTACHMENTS:

- Memo # 2011-TC/T-099 from Debby Franklin to P & Z Board- 1 page
- Agenda Report Item No.11 (from Council)- 1 page
- Mayor's Proposed changes to RV Parking- 1 page
- Portion of Approved RTCM minutes 8/1/2011-1 page
- General Provisions- Section 1-5.15 & Section 1-5.16- 2 pages
- Email from Karl Bohne – Town Attorney- 1 page
- Florida Statues 2011- Motor Vehicles- 6 pages

ACTION OPTIONS:
Discussion and Work towards a recommendation to Council.

TOWN OF MALABAR

MEMORANDUM

Date: August 2, 2011 2011-TC/T-099

To: Planning & Zoning Board

From: Debby K. Franklin, Town Clerk/Treasurer

Ref: Consideration of Code Change

The Mayor asked Council if this could be brought to P&Z for consideration. Per Malabar Code, the parking of recreational vehicles in front yards is restricted. The Mayor proposes changes to allow such parking.

Council approved this going to P&Z for consideration.

TOWN OF MALABAR

AGENDA ITEM REPORT

AGENDA ITEM NO: 11
Meeting Date: August 1, 2011

Prepared By: Debby K. Franklin, C.M.C., Town Clerk/Treasurer

SUBJECT: Discussion of Parking of Recreational Vehicles (Eschenberg)

BACKGROUND/HISTORY:
The Mayor asked for this to be on for discussion.

FINANCIAL IMPACT:
Unknown

ATTACHMENTS:
Article V related to the parking of recreational vehicles.

ACTION:
Staff requests Discussion and Direction

MAYOR'S PROPOSED CHANGES TO RV PARKING

Delete 1. and replace with:

1. A limited number of recreational vehicles may be parked in the front yard or driveway.

In RS-10 and 15, the limit shall be one.
In RS-21 the limit shall be two.
In RR-65 the limit shall be three.

Add to 2. Children under 14 years of age are exempt and may sleep overnight in an RV.

Delete 4.

Requested action: Send to P&Z for a recommendation on Mayor's proposed changes.

L. DISCUSSION ITEMS:

11. Parking of Recreational Vehicles

Exhibit: Agenda Report No. 11
Recommendation: Request Discussion and Direction

Mayor's item. This is something else he sees when he drives around on Eagle Patrol. He asked if a lot of people are doing this should we make it ok? If we have pro-active code enforcement, he could spot 40-50 violations. We don't know what the future brings. In the interest in freedom and property rights, we can have some effect by changing the code now. Mayor said if someone has a popup camper and let them camp out. Also can't have it in front yard for over 48 hours. He wants Council to send it over to P&Z. No objections.

(ii) Illustrate in narrative and graphic form the proposed changes to the building or structure after it has been moved, that will bring the structure into compliance with all applicable requirements of the Town's adopted Building Code as well as the Town Land Development Code.

If drawings of the structure or building to be moved showing compliance as above stated are on record with the Town already, the above requirement for drawings of the structure is waived. The Town Council, if necessary, shall request a designated professional to examine and recommend to the Town Council whether the drawings and proposed routing are compliant with Town regulations prior to issuance of a permit. The applicant shall bear costs associated with the Town's review of the plans.

Cross reference—Buildings and building regulations, ch. 6.

Section 1-5.14. Structures to have access.

Every building hereafter erected or moved shall be on a lot adjacent to an approved street, and all structures shall be so located on lots as to provide safe and convenient access for servicing, fire protection, and required off-street parking.

All lots on which structures are to be built shall have a minimum width of twenty-five (25) feet along or adjacent to an approved street. The Town Council may provide a waiver to this requirement after considering recommendations of the Planning and Zoning Board.

Section 1-5.15. Parking, storage or use of major recreational equipment.

Major recreational equipment is defined as including boats and boat trailers, pickup campers or coaches (designed to be mounted on an automotive vehicle), motorized dwellings, collapsible camping trailers or motorized dwellings, tent trailers and the like, and cases or boxes used for transporting recreational equipment whether occupied by such equipment or not.

1. No major recreational equipment shall be parked or stored in any residential front yard in any residential district for more than forty-eight (48) hours during loading or unloading.

2. No such major recreational equipment shall be used for living, sleeping, housekeeping, office, or commercial purposes when parked or stored on a residential lot, or in any location not approved for such use.

3. No such major recreational equipment shall be located within a public right-of-way.

4. If such equipment is a collapsible camping trailer, the trailer shall be stored in a collapsed state.

Mobile homes or other mobile equipment or structures used temporarily in connection with construction, used as a dwelling, office or sales room may be located temporarily in all districts

only after the release of a building permit and during the period of construction activity, under a temporary zoning permit, provided however, said trailer must be removed within ten (10) days after completion of construction.

Cross reference—Boats, marinas and waterways, ch. 5.

Section 1-5.16. Parking, storage of vehicles.

No automotive vehicles or trailers of any kind or type or any recreational equipment without required current license plates shall be parked or stored on any residentially zoned property other than in an enclosed building, carport or behind a barrier which obscures visibility from any public or approved private street, or adjacent property provided the location is not in any required yard area. This section shall not apply to operative agricultural vehicles or equipment within an RR-65 district.

Any above referenced vehicles or equipment that are visible from a public or private street or from adjacent property shall be titled to the property owner or legal resident or it shall be considered abandoned property under ordinance 3-1-77, § 1 (Section 11-26, Town of Malabar Code of Ordinances).
(Ord. No. 92-8, § 1(F), (G), 8-18-92)

Section 1-5.17. Proximity of dwelling units to railroad tracks.

No dwelling unit shall be located closer than five hundred (500) feet from the railroad tracks unless it has been soundproofed to attenuate an exterior sound pressure level of one hundred (100) decibels.

Section 1-5.18. Standards for required on-site or off-site improvements.

All sidewalks, other walkways, streets, drainage facilities, utilities or other on- or off-site improvements shall meet applicable standards of the Town's subdivision regulations for sidewalks.

Section 1-5.19. Keeping of animals.

The keeping of grazing animals shall be allowed in any rural residential district provided that where the lot size is less than two and one-half (2½) acres, one (1) animal shall be allowed for the first acre plus one (1) additional animal for each additional one-half (½) acre thereafter.

Cross reference—Animals, ch. 4.

Section 1-5.20. Reserved.

Editor's note—Ordinance No. 04-08, § 3, adopted July 12, 2004, repealed § 1-5.20 in its entirety. Formerly, such section pertained to residential structures on lots less than one acre in area and derived from Ord. No. 90-5, 4-17-90.

Town Clerk / Treasurer

From: Karl Bohne [kbohne@fla-lawyers.com]
Sent: Monday, August 01, 2011 11:05 AM
To: Town Clerk / Treasurer
Subject: RE: Agenda Item 11

We need to define what a recreational vehicle is. That particular code section does not even use the term recreational vehicle. It uses such terms as motorized dwelling, collapsible camping trailers, tent trailers "and the like". There are so many definitions in FS 320.01 (b) that may be applicable here. Just using the term "recreational vehicle" may be too ambiguous.

From: Town Clerk / Treasurer [mailto:townclerk@townofmalabar.org]
Sent: Sunday, July 31, 2011 8:56 AM
To: Marisa Acquaviva; BEATTYCARL@aol.com; White, David; Steve Rivet (home); Rivet, Steve; Jeff McKnight; Bonilyn Wilbanks; Karl Bohne
Cc: Tom Eschenberg
Subject: Agenda Item 11

Attached please find a memo from the Mayor regarding Agenda Item 11. I will have printed copies at your seats.

Debby K. Franklin, C.M.C.
Town Clerk/Treasurer
Town of Malabar
2725 Malabar Road
Malabar, FL 32950
townclerk@townofmalabar.org
321-727-7764 x12
321-722-2234 Fax
321-213-8009 Cell
Town Website: www.townofmalabar.org

Select Year: 2011 Go

The 2011 Florida Statutes

Title XXIII
MOTOR VEHICLES

Chapter 320
MOTOR VEHICLE LICENSES

View Entire Chapter

320.01 Definitions, general.—As used in the Florida Statutes, except as otherwise provided, the term:

(1) "Motor vehicle" means:

(a) An automobile, motorcycle, truck, trailer, semitrailer, truck tractor and semitrailer combination, or any other vehicle operated on the roads of this state, used to transport persons or property, and propelled by power other than muscular power, but the term does not include traction engines, road rollers, such vehicles as run only upon a track, bicycles, or mopeds.

(b) A recreational vehicle-type unit primarily designed as temporary living quarters for recreational, camping, or travel use, which either has its own motive power or is mounted on or drawn by another vehicle. Recreational vehicle-type units, when traveling on the public roadways of this state, must comply with the length and width provisions of s. 316.515, as that section may hereafter be amended. As defined below, the basic entities are:

1. The "travel trailer," which is a vehicular portable unit, mounted on wheels, of such a size or weight as not to require special highway movement permits when drawn by a motorized vehicle. It is primarily designed and constructed to provide temporary living quarters for recreational, camping, or travel use. It has a body width of no more than 8½ feet and an overall body length of no more than 40 feet when factory-equipped for the road.

2. The "camping trailer," which is a vehicular portable unit mounted on wheels and constructed with collapsible partial sidewalls which fold for towing by another vehicle and unfold at the campsite to provide temporary living quarters for recreational, camping, or travel use.

3. The "truck camper," which is a truck equipped with a portable unit designed to be loaded onto, or affixed to, the bed or chassis of the truck and constructed to provide temporary living quarters for recreational, camping, or travel use.

4. The "motor home," which is a vehicular unit which does not exceed the length, height, and width limitations provided in s. 316.515, is a self-propelled motor vehicle, and is primarily designed to provide temporary living quarters for recreational, camping, or travel use.

5. The "private motor coach," which is a vehicular unit which does not exceed the length, width, and height limitations provided in s. 316.515(9), is built on a self-propelled bus type chassis having no fewer than three load-bearing axles, and is primarily designed to provide temporary living quarters for recreational, camping, or travel use.

6. The "van conversion," which is a vehicular unit which does not exceed the length and width limitations provided in s. 316.515, is built on a self-propelled motor vehicle chassis, and is designed for recreation, camping, and travel use.

7. The "park trailer," which is a transportable unit which has a body width not exceeding 14 feet

and which is built on a single chassis and is designed to provide seasonal or temporary living quarters when connected to utilities necessary for operation of installed fixtures and appliances. The total area of the unit in a setup mode, when measured from the exterior surface of the exterior stud walls at the level of maximum dimensions, not including any bay window, does not exceed 400 square feet when constructed to ANSI A-119.5 standards, and 500 square feet when constructed to United States Department of Housing and Urban Development Standards. The length of a park trailer means the distance from the exterior of the front of the body (nearest to the drawbar and coupling mechanism) to the exterior of the rear of the body (at the opposite end of the body), including any protrusions.

8. The "fifth-wheel trailer," which is a vehicular unit mounted on wheels, designed to provide temporary living quarters for recreational, camping, or travel use, of such size or weight as not to require a special highway movement permit, of gross trailer area not to exceed 400 square feet in the setup mode, and designed to be towed by a motorized vehicle that contains a towing mechanism that is mounted above or forward of the tow vehicle's rear axle.

(2)(a) "Mobile home" means a structure, transportable in one or more sections, which is 8 body feet or more in width and which is built on an integral chassis and designed to be used as a dwelling when connected to the required utilities and includes the plumbing, heating, air-conditioning, and electrical systems contained therein. For tax purposes, the length of a mobile home is the distance from the exterior of the wall nearest to the drawbar and coupling mechanism to the exterior of the wall at the opposite end of the home where such walls enclose living or other interior space. Such distance includes expandable rooms, but excludes bay windows, porches, drawbars, couplings, hitches, wall and roof extensions, or other attachments that do not enclose interior space. In the event that the mobile home owner has no proof of the length of the drawbar, coupling, or hitch, then the tax collector may in his or her discretion either inspect the home to determine the actual length or may assume 4 feet to be the length of the drawbar, coupling, or hitch.

(b) "Manufactured home" means a mobile home fabricated on or after June 15, 1976, in an offsite manufacturing facility for installation or assembly at the building site, with each section bearing a seal certifying that it is built in compliance with the federal Manufactured Home Construction and Safety Standard Act.

(3) "Owner" means any person, firm, corporation, or association controlling any motor vehicle or mobile home by right of purchase, gift, lease, or otherwise.

(4) "Trailer" means any vehicle without motive power designed to be coupled to or drawn by a motor vehicle and constructed so that no part of its weight or that of its load rests upon the towing vehicle.

(5) "Semitrailer" means any vehicle without motive power designed to be coupled to or drawn by a motor vehicle and constructed so that some part of its weight and that of its load rests upon or is carried by another vehicle.

(6) "Net weight" means the actual scale weight in pounds with complete catalog equipment.

(7) "Gross weight" means the net weight of a motor vehicle in pounds plus the weight of the load carried by it.

(8) "Cwt" means the weight per hundred pounds, or major fraction thereof, of a motor vehicle.

(9) "Truck" means any motor vehicle with a net vehicle weight of 5,000 pounds or less and which is designed or used principally for the carriage of goods and includes a motor vehicle to which has been added a cabinet box, a platform, a rack, or other equipment for the purpose of carrying goods other than the personal effects of the passengers.

(10) "Heavy truck" means any motor vehicle with a net vehicle weight of more than 5,000 pounds, which is registered on the basis of gross vehicle weight in accordance with s. 320.08(4), and which is designed or used for the carriage of goods or designed or equipped with a connecting device for the purpose of drawing a trailer that is attached or coupled thereto by means of such connecting device and includes any such motor vehicle to which has been added a cabinet box, a platform, a rack, or other equipment for the purpose of carrying goods other than the personal effects of the passengers.

(11) "Truck tractor" means a motor vehicle which has four or more wheels and is designed and equipped with a fifth wheel for the primary purpose of drawing a semitrailer that is attached or coupled thereto by means of such fifth wheel and which has no provision for carrying loads independently.

(12) "Gross vehicle weight" means:

(a) For heavy trucks with a net weight of more than 5,000 pounds, but less than 8,000 pounds, the gross weight of the heavy truck. The gross vehicle weight is calculated by adding to the net weight of the heavy truck the weight of the load carried by it, which is the maximum gross weight as declared by the owner or person applying for registration.

(b) For heavy trucks with a net weight of 8,000 pounds or more, the gross weight of the heavy truck, including the gross weight of any trailer coupled thereto. The gross vehicle weight is calculated by adding to the gross weight of the heavy truck the gross weight of the trailer, which is the maximum gross weight as declared by the owner or person applying for registration.

(c) The gross weight of a truck tractor and semitrailer combination is calculated by adding to the net weight of the truck tractor the gross weight of the semitrailer, which is the maximum gross weight as declared by the owner or person applying for registration; such vehicles are together by means of a fifth-wheel arrangement whereby part of the weight of the semitrailer and load rests upon the truck tractor.

(13) "Passenger," or any abbreviation thereof, does not include a driver.

(14) "Private use" means the use of any vehicle which is not properly classified as a for-hire vehicle.

(15)(a) "For-hire vehicle" means any motor vehicle, when used for transporting persons or goods for compensation; let or rented to another for consideration; offered for rent or hire as a means of transportation for compensation; advertised in a newspaper or generally held out as being for rent or hire; used in connection with a travel bureau; or offered or used to provide transportation for persons solicited through personal contact or advertised on a "share-expense" basis. When goods or passengers are transported for compensation in a motor vehicle outside a municipal corporation of this state, or when goods are transported in a motor vehicle not owned by the person owning the goods, such transportation is "for hire." The carriage of goods and other personal property in a motor vehicle by a corporation or association for its stockholders, shareholders, and members, cooperative or otherwise, is transportation "for hire."

(b) The following are not included in the term "for-hire vehicle": a motor vehicle used for transporting school children to and from school under contract with school officials; a hearse or ambulance when operated by a licensed embalmer or mortician or his or her agent or employee in this state; a motor vehicle used in the transportation of agricultural or horticultural products or in transporting agricultural or horticultural supplies direct to growers or the consumers of such supplies or to associations of such growers or consumers; a motor vehicle temporarily used by a farmer for the transportation of agricultural or horticultural products from any farm or grove to a packinghouse or to a point of shipment by a transportation company; or a motor vehicle not exceeding 1½ tons under contract with the Government of the United States to carry United States mail, provided such vehicle is

not used for commercial purposes.

(16) "Road" means the entire width between the boundary lines of every way or place of whatever nature when any part thereof is open to the use of the public for purposes of vehicular traffic.

(17) "Brake horsepower" means the actual unit of torque developed per unit of time at the output shaft of an engine, as measured by a dynamometer.

(18) "Department" means the Department of Highway Safety and Motor Vehicles.

(19)(a) "Registration period" means a period of 12 months or 24 months during which a motor vehicle or mobile home registration is valid.

(b) "Extended registration period" means a period of 24 months during which a motor vehicle or mobile home registration is valid.

(20) "Marine boat trailer dealer" means any person engaged in:

(a) The business of buying, selling, manufacturing, or dealing in trailers specifically designed to be drawn by another vehicle and used for the transportation on land of vessels, as defined in s. 327.02; or

(b) The offering or displaying of such trailers for sale.

(21) "Renewal period" means the period during which renewal of a motor vehicle registration or mobile home registration is required, as provided in s. 320.055.

(22) "Golf cart" means a motor vehicle that is designed and manufactured for operation on a golf course for sporting or recreational purposes and that is not capable of exceeding speeds of 20 miles per hour.

(23) "Apportioned motor vehicle" means any motor vehicle which is required to be registered, or with respect to which an election has been made to register it, under the International Registration Plan.

(24) "International Registration Plan" means a registration reciprocity agreement among states of the United States and provinces of Canada providing for payment of license fees on the basis of fleet miles operated in various jurisdictions.

(25) "Apportionable vehicle" means any vehicle, except recreational vehicles, vehicles displaying restricted plates, city pickup and delivery vehicles, buses used in transportation of chartered parties, and government-owned vehicles, which is used or intended for use in two or more member jurisdictions that allocate or proportionally register vehicles and which is used for the transportation of persons for hire or is designed, used, or maintained primarily for the transportation of property and:

(a) Is a power unit having a gross vehicle weight in excess of 26,001 pounds;

(b) Is a power unit having three or more axles, regardless of weight; or

(c) Is used in combination, when the weight of such combination exceeds 26,001 pounds gross vehicle weight.

Vehicles, or combinations thereof, having a gross vehicle weight of 26,001 pounds or less and two-axle vehicles may be proportionally registered.

(26) "Commercial motor vehicle" means any vehicle which is not owned or operated by a governmental entity, which uses special fuel or motor fuel on the public highways, and which has a gross vehicle weight of 26,001 pounds or more, or has three or more axles regardless of weight, or is used in combination when the weight of such combination exceeds 26,001 pounds gross vehicle weight. A vehicle that occasionally transports personal property to and from a closed-course motorsport facility, as defined in s. 549.09(1)(a), is not a commercial motor vehicle if the use is not for profit and corporate sponsorship is not involved. As used in this subsection, the term "corporate sponsorship" means a

payment, donation, gratuity, in-kind service, or other benefit provided to or derived by a person in relation to the underlying activity, other than the display of product or corporate names, logos, or other graphic information on the property being transported.

(27) "Motorcycle" means any motor vehicle having a seat or saddle for the use of the rider and designed to travel on not more than three wheels in contact with the ground, excluding a vehicle in which the operator is enclosed by a cabin unless it meets the requirements set forth by the National Highway Traffic Safety Administration for a motorcycle. The term "motorcycle" does not include a tractor or a moped.

(28) "Moped" means any vehicle with pedals to permit propulsion by human power, having a seat or saddle for the use of the rider and designed to travel on not more than three wheels, with a motor rated not in excess of 2 brake horsepower and not capable of propelling the vehicle at a speed greater than 30 miles per hour on level ground, and with a power-drive system that functions directly or automatically without clutching or shifting gears by the operator after the drive system is engaged. If an internal combustion engine is used, the displacement may not exceed 50 cubic centimeters.

(29) "Interstate" means vehicle movement between or through two or more states.

(30) "Intrastate" means vehicle movement from one point within a state to another point within the same state.

(31) "Person" means and includes natural persons, corporations, copartnerships, firms, companies, agencies, or associations, singular or plural.

(32) "Registrant" means a person in whose name or names a vehicle is properly registered.

(33) "Motor carrier" means any person owning, controlling, operating, or managing any motor vehicle used to transport persons or property over any public highway.

(34) "Motorized disability access vehicle" means a vehicle designed primarily for handicapped individuals with normal upper body abilities and designed to be fueled by gasoline, travel on not more than three wheels, with a motor rated not in excess of 2 brake horsepower and not capable of propelling the vehicle at a speed greater than 30 miles per hour on level ground, and with a power-drive system that functions directly or automatically without clutching or shifting gears by the operator after the drive system is engaged. If an internal combustion engine is used, the displacement may not exceed 50 cubic centimeters.

(35) "Resident" means a person who has his or her principal place of domicile in this state for a period of more than 6 consecutive months, who has registered to vote in this state, who has made a statement of domicile pursuant to s. 222.17, or who has filed for homestead tax exemption on property in this state.

(36) "Nonresident" means a person who is not a resident.

(37) "Electric vehicle" means a motor vehicle that is powered by an electric motor that draws current from rechargeable storage batteries, fuel cells, or other sources of electrical current.

(38) "Disabled motor vehicle" means any motor vehicle as defined in subsection (1) which is not operable under its own motive power, excluding a nondisabled trailer or semitrailer, or any motor vehicle that is unsafe for operation upon the highways of this state.

(39) "Replacement motor vehicle" means any motor vehicle as defined in subsection (1) under tow by a wrecker to the location of a disabled motor vehicle for the purpose of replacing the disabled motor vehicle, thereby permitting the transfer of the disabled motor vehicle's operator, passengers, and load to an operable motor vehicle.

(40) "Wrecker" means any motor vehicle that is used to tow, carry, or otherwise transport motor

vehicles and that is equipped for that purpose with a boom, winch, car carrier, or other similar equipment.

(41) "Tow" means to pull or draw any motor vehicle with a power unit by means of a direct attachment, drawbar, or other connection or to carry a motor vehicle on a power unit designed to transport such vehicle from one location to another.

(42) "Low-speed vehicle" means any four-wheeled electric vehicle whose top speed is greater than 20 miles per hour but not greater than 25 miles per hour, including neighborhood electric vehicles. Low-speed vehicles must comply with the safety standards in 49 C.F.R. s. 571.500 and s. 316.2122.

(43) "Utility vehicle" means a motor vehicle designed and manufactured for general maintenance, security, and landscaping purposes, but the term does not include any vehicle designed or used primarily for the transportation of persons or property on a street or highway, or a golf cart, or an all-terrain vehicle as defined in s. 316.2074.

(44) For purposes of this chapter, the term "agricultural products" means any food product; any agricultural, horticultural, or livestock product; any raw material used in plant food formulation; and any plant food used to produce food and fiber.

(45) "Mini truck" means any four-wheeled, reduced-dimension truck that does not have a National Highway Traffic Safety Administration truck classification, with a top speed of 55 miles per hour, and which is equipped with headlamps, stop lamps, turn signal lamps, taillamps, reflex reflectors, parking brakes, rearview mirrors, windshields, and seat belts.

History.—ss. 1, 6, ch. 7275, 1917; s. 1, ch. 7737, 1918; RGS 1006, 1011; ss. 2, 5, ch. 8410, 1921; s. 2, ch. 9156, 1923; s. 1, ch. 9157, 1923; ss. 1, 3, ch. 10182, 1925; CGL 1280, 1285, 1677; s. 3, ch. 15625, 1931; s. 3, ch. 16085, 1933; s. 1, ch. 20743, 1941; s. 1, ch. 20911, 1941; s. 1, ch. 26923, 1951; s. 1, ch. 59-351; s. 1, ch. 65-61; s. 1, ch. 65-446; ss. 23, 24, 35, ch. 69-106; s. 1, ch. 70-215; s. 1, ch. 70-391; s. 93, ch. 71-377; s. 1, ch. 72-339; s. 1, ch. 73-284; s. 2, ch. 74-243; s. 3, ch. 75-66; s. 2, ch. 76-135; s. 4, ch. 76-286; s. 1, ch. 77-180; s. 1, ch. 77-357; s. 1, ch. 78-221; s. 125, ch. 79-400; s. 12, ch. 81-151; s. 22, ch. 82-134; s. 3, ch. 83-188; s. 23, ch. 83-215; s. 1, ch. 83-318; s. 1, ch. 84-182; s. 7, ch. 84-260; s. 5, ch. 85-155; s. 43, ch. 85-180; s. 10, ch. 85-309; s. 4, ch. 85-343; s. 11, ch. 86-243; s. 11, ch. 87-161; s. 20, ch. 87-198; s. 5, ch. 87-225; s. 1, ch. 88-147; s. 66, ch. 89-282; s. 2, ch. 89-320; s. 1, ch. 90-163; s. 4, ch. 90-270; s. 5, ch. 92-148; s. 39, ch. 94-306; s. 910, ch. 95-148; s. 10, ch. 95-247; s. 10, ch. 95-333; s. 29, ch. 96-413; s. 3, ch. 97-58; s. 2, ch. 99-163; s. 15, ch. 99-248; s. 39, ch. 2001-196; s. 1, ch. 2007-242; s. 16, ch. 2008-176; s. 2, ch. 2008-179; s. 6, ch. 2009-183.

PAGE

49/58

BLANK

PAGE

TOWN OF MALABAR

PLANNING AND ZONING

AGENDA ITEM REPORT

AGENDA ITEM NO: 5
Meeting Date: August 24, 2011

Prepared By: Denine M. Sherear, Planning and Zoning Secretary

---

SUBJECT: Definition of Light Industrial

BACKGROUND/HISTORY:
This item is continued from last meeting from the discussion of the proposed land use changes on the FLUM.

The Board discussed the suggestions submitted by Don Krieger and Bob Wilbur at last P & Z meeting on 8/10/2011. Staff was directed to get City of Sebastian's zoning for "Light Industrial". The Board is going to review all comments and suggestions and work towards a recommendation to Council.

ATTACHMENTS:
- **Bring Packet from P & Z Meeting 7/27/2011**
- City of Sebastian information on "Light Industrial"- 7 pages

ACTION OPTIONS:
Continued Board work towards a recommendation to Council.

Sebastian

ARTICLE V. - ZONING DISTRICT REGULATIONS

This article describes the purposes and intent of each zoning district, identifies permitted and conditional uses by zoning district, and provides size and dimensional regulations for respective zoning districts. All proposed new development shall be required to comply with site plan review requirements of article XVIII and performance criteria of chapter III. All conditional uses must comply with procedures and criteria on article VI. The following sections present the basic purpose and intent of each zoning district and the uses permitted therein.

Sec. 54-2-5.1. - Conservation District (C).

(a) *Intent.* This district is intended to implement the comprehensive plan policies for preserving areas designated "Conservation" on the comprehensive plan future land use map (FLUM). These areas primarily consist of environmentally sensitive natural resources and systems including but not limited to the Sebastian River, the Indian River, other environmentally sensitive public lands, and mangrove fringe protected by Florida Statutes. The intent of this district is to provide for the long term preservation of environmentally sensitive natural resources systems designated "Conservation" on the comprehensive plan FLUM.

No development shall be permitted within the Conservation District unless the applicant for such development provides proof of permits or proof of exemptions from all applicable state or federal agencies having jurisdiction.

The developer/applicant of lands within the Conservation (C) District shall be required to provide a site engineered delineation of all environmentally sensitive lands, including, but not limited to, wetlands and uplands habitat and shall also indicate the location of lands or waters within the jurisdiction of the state and/or federal government. The applicant shall bear the burden of proof in determining that development plans required pursuant to article XVIII include appropriate mitigation techniques to prevent/minimize adverse impacts to wetlands, transitional wetlands, upland habitat, tidal waters and estuarine areas, including benthic communities, such as seagrass beds and other live bottom communities, or additional environmentally fragile natural systems. An on-site survey by environmental professionals shall be submitted by the applicant. Such determinations shall be based on physical and biological data obtained from specific site investigations and provided with the earliest application for city development approval. These determinations shall be predicated on findings rendered by professionals competent in producing data and analysis necessary to support impact assessments, including findings regarding the impacts of potential development on the physical and biological function and value of environmentally sensitive lands. Any development within the Conservation District shall be required to comply with all performance criteria of chapter III, especially article XI, Environmental

distance separating any one building over 25 feet in height from an adjacent building shall be 20 feet plus one foot for each additional two feet in height above 25 feet.

f. Height. The height of structures shall not exceed 35 feet.

g. Open space. Commercial development shall maintain no less than 25% percent open space. Mixed use residential and commercial structures shall maintain no less than 30% open space.

(2) Criteria for establishing site specific size and dimension requirements. See section 54-4-20.1(f) for specific criteria to be applied in assessing density, intensity, and other size and dimension requirements for site specific development proposals.

(i) *Screening and buffer yard requirements.* See article XIII for specific criteria to be applied in assessing the required screening and buffer yard requirements density, intensity, and other size and dimension requirements for site specific development proposals.

(j) *Subdivision improvements and urban design amenities.* In addition to requirements of article XIX of this code as well as open space systems and street furniture, the PUD(C) shall reflect principles and practices of urban design, including streetscape amenities which promote a harmonious and aesthetic environment for pedestrians and other user groups within the proposed development. This requirement shall be enforced in order to implement the purpose and intent of the PUD(C). Reference section 54-4-20.1(j) for additional criteria.

Sec. 54-2-5.13. - Industrial Planned Unit Development (PUD-I).

(a) *Intent.* The objective of this zoning district is to establish regulatory standards for controlling the location of comprehensively planned industrial development located in areas removed from residential areas and accessible to arterial roadways. The PUD(I) is intended to incorporate a flexible management policy, which fosters innovative master planning in the design and development of large scale industrial areas. The PUD(I) District provides for industrial land uses and accessory sales and service activities and promotes high standards of land planning and site design.

(b) *Compliance with comprehensive plan and future land use map.* All industrial PUD's must comply with the provisions of the Sebastian Comprehensive Plan. In addition to meeting the performance criteria set forth in this section, all land contained within an industrial PUD must have an "Industrial" comprehensive land use map designation.

(c) *Location and size.* An Industrial PUD shall have frontage on a primary arterial roadway, as designated on the City of Sebastian Major Thoroughfare Plan. At the time a PUD(I) application is submitted and approved by the city the land included in the PUD(I) application shall have a minimum of 25 contiguous acres and shall be under unified control as required pursuant to section 54-4-20.1(b).

(d) *Land use mix.* The specific land use mix within a PUD(I) District development shall be determined by the underlying comprehensive plan future land use map designation. The location of the various land uses shall be determined during the review of the preliminary development plan required pursuant to section 54-4-20.3

(e) *Permitted uses.* Permitted uses shall include those land use activities cited below which are determined to be consistent with the underlying comprehensive plan future land use map designation and shall be permitted by right within an approved PUD(I) development plan.

(1) Industrial activities as defined in section 54-2-5.6

(f) *Conditional uses.* Conditional uses shall include those land use activities as defined in section 54-2-5.6 and are; (1) consistent with the comprehensive plan future land use map designation; and (2) comply with all requirements and conditional use criteria provided in this ordinance and in other applicable laws and ordinances. The planning and zoning commission shall determine if such conditions and provisions are satisfied. All conditional uses allowed within an industrial (IN) zoning district may be permitted within the corresponding comprehensive plan land use map designation provided that all conditional use criteria of article VI are satisfied.

(g) *Perimeter transition area.* All uses shall conform to the purposes of the Industrial Planned Unit Development District and shall be compatible with all uses, existing or proposed in the vicinity of the area covered by the proposed planned development.

(1) Compatibility with adjacent residential property. No structure proposed for industrial use shall be constructed within 200 feet of that part of the perimeter property line adjacent to property zoned for residential development.

(2) Compatibility with adjacent nonresidential property. In those cases where the perimeter line does not abut an existing residential development or residentially zoned land, the minimum setback shall be determined as part of the preliminary development plan review. No building shall be located within 40 feet of the outer boundary of the PUD district, excepting entryway security buildings and structures approved by the city council.

(h) *Size and dimension regulations.* The intent of the PUD(I) is to offer greater flexibility in the design of innovative large scale development and to accommodate amenities generally not found in conventional development. The location, size, dimensions, and design of yards, building setbacks, points of vehicular access, parking areas, building characteristics, and all other planned site improvements shall provide for:

- Safe and convenient internal vehicular circulation, including access and sufficient area for effective delivery of emergency services such as fire protection;
- Buildings with safe entry and exit from the front and the rear of respective buildings; and
- Convenient, well landscaped and designed pedestrian ways and open space systems.

All such planned site improvements shall be governed by the following:

(1) Minimum size and dimension of industrial site improvements.

a. Minimum lot size. No individual minimum lot size shall be required within an Industrial Planned Unit Development.

b. *Floor area ratio(FAR).* The FAR shall not exceed 50% and shall comply with section 54-2-5.6(d) provisions governing FAR in industrial districts.

c. Frontage requirements. All land use activities within a PUD(I) shall have access to a public street.

d. *Setback and yard requirements.* There are no required setbacks or yards within the Industrial Planned Unit Development except as otherwise provided for herein.

e. Distance between buildings. There shall be a minimum of 20 feet separating buildings, excepting buildings with immediately adjoining or common walls. However, the minimum distance separating one building over 25 feet in height from an adjacent building shall be 20 feet plus one foot for each additional two feet in height above 25 feet.

f. Height. The height of structures shall not exceed 35 feet.

g. Open space. The development shall maintain no less than 25% percent open space. Higher standards may be required for conditional uses, which demonstrate consistency with standards for open space and green space for such uses within this code.

(2) General criteria for reviewing size and dimension standards. See section 54-4-20.1(f) for specific criteria to be applied in assessing density, intensity, and other size and dimension requirements for site specific development proposals.

(i) *Screening and buffer yard requirements.* See article XIII for specific criteria to be applied in assessing the required screening and buffer yard requirements.

(j) *Subdivision improvements and urban design amenities.* In addition to requirements of article XIX of this code as well as open space systems and street furniture, shall reflect principles and practices of urban design, including streetscape amenities which promote a harmonious and aesthetic environment for pedestrians and other user groups within the proposed development. This requirement shall be enforced in order to implement the purpose and intent of the PUD(C) and section 54-4-20.1(j).

Sec. 54-2-5.14. - Mobile Home Planned Unit Development (PUD-MH).

This section provides specific regulations for the development of Mobile Home Planned Unit Developments (PUD(MH) in areas designated for residential development on the comprehensive plan future land use map.

(a) *Permitted uses and structures.* The following land uses and structures are permitted in the PUD (MH) district subject to compliance with the provisions of this code:

(1) Single-family detached mobile homes and residential manufactured homes as defined in section 54-2-5.2.7(b).

(2) Parks, playgrounds, community facilities and noncommercial recreational facilities such as golf courses, game rooms, tennis courts, libraries, and similar uses.

(3) Uses and structures which are customarily accessory and clearly incidental and subordinate to the above uses and structures, including approved storage facilities.

(4) Public and private utilities.

(b) *Conditional uses and structures.* In this district as a conditional use a building or premises may be used for only the following conditional uses upon compliance with applicable conditions stated herein and upon compliance with all other applicable provisions of this code, including site plan review and performance criteria. the planning and zoning commission shall ascertain if such conditions and provisions are satisfied.

(1) Recreational vehicle areas. Recreational vehicle areas may be allowed in a PUD(MH) district as a conditional use subject to compliance with the standards set forth below:

a. *Area requirements.* The maximum area allowed for the establishment of a recreational vehicle area within a PUD(MH) District is ten acres or ten percent of the total land area within the PUD(MH) District, whichever is the lesser land area.

b. *Density.* The maximum density permitted for recreational vehicles shall be 15 units per gross acre of land comprising the recreational vehicle area. The minimum size site for each recreational vehicle space shall be 1,500 square feet.

c. *Minimum dimensions of each recreational vehicle site.* Minimum 30 feet width and

(3) The sales activity shall be conducted inside the sales office and model units so as not to be noticeable from the outside, except for permitted graphics;

(4) On-site sales activities shall be terminated upon completion of original sales; and

(5) A minimum of one parking space for each two proposed units shall be provided on site for the sales staff and potential purchasers' use during the (marketing) sales promotional and construction phases.

(f) *Conversions to time-share units:* No development involving the conversion of an existing dwelling unit to a time-share unit may take place unless the applicant attaches to his application for zoning or site plan approval either:

(1) A copy of any information required by the state, including as may be appropriate, a condominium declaration, sales prospectus, and/or other documents required by the state in regulating the use. Such material shall include a statement in prominent type declaring that time-share units will or may be created with respect to units proposed; and/or

(2) An amendment to a prior existing condominium declaration that permits time-share estates to be created, which amendment has been executed by each record owner of each unit of the condominium and each record owner of each lien on each unit of the condominium.

(g) *Other required information.* Applicants for a time-share use shall file with the city all public documents required by the state in regulating such use. The purpose of this requirement is to provide assurance that the applicant has been found in compliance with all requisite state regulations governing the use, including method of sales, operations, and other issues of public health, safety and welfare.

Sec. 54-2-5.6. - Industrial District (IN).

(a) *Intent.* The intent of the IN District is to provide a management framework for implementing comprehensive plan objectives and policies for limited industrial development on land designated IN on the future land use map. All development in the IN District shall comply with the comprehensive plan, performance criteria in chapter iii, as well as other applicable land development regulations. Salvage yards and junkyards are deemed to generate highly extensive adverse impacts for the urban area and shall not be permitted uses in the city limits of Sebastian. Such activities are more appropriately located near major regional transportation facilities.

(b) *Permitted uses:*

Utilities, public and private

Business and professional offices with or without drive-through facilities

Gasoline sales

Commercial retail with ;lte; 5,000 sq. ft.

Commercial amusements, enclosed

Storage facilities

Plant nurseries

Restaurants with or without drive-through facilities

Trades and skilled services

Wholesale trades and services

Veterinary services

Industrial activities

Parking garages

Clubs and lodges, public and private

Administrative services, public and private

Vehicular sales and related services

Accessory watchman facilities

Medical services

Vehicular services and maintenance

Accessory uses to permitted uses

(c) *Conditional uses:*
Commercial retail with ;gt; 5,000 sq. ft.

Hotels and motels

Protective and emergency services, public

Parks and recreation, public

Commercial amusements, unenclosed

Adult entertainment establishment

Flea markets

Accessory uses to conditional uses

(d) *Dimensional regulations:*

(1) Maximum FAR: 50%

(2) Maximum height: 35 feet. No structure shall be erected within the approach zones of active runways on the Sebastian Municipal Airport at a height in excess of those permitted by the FAA or the city council. All structures shall comply with the City of Sebastian Airport Master Plan.

(3) Lot coverage:

Maximum building coverage: 50%	Minimum open space: 20%
Maximum impervious surface: 80%	

(4) Lot dimensions:
Minimum lot size: 15,000 square feet
Minimum width: 100 feet
Minimum depth: 125 feet

(5) Minimum setbacks:
Front yard: 20 feet
Side interior yard: None
Rear yard: 10 feet.
No building or structure in an IN District shall be located closer than 30 feet to a residential district.

(e) *Processing and storage within the Industrial District:* In the Industrial District any use is permitted either indoors or outdoors, but in conformance with the applicable performance standards. In the Industrial District, all business, servicing, manufacturing or processing within 200 feet of a residential district boundary may be outdoors but shall be effectively screened by a solid wall, fence or natural landscaping providing a 90 percent opaque screen planting so that the materials shall not be visible from the residential district. The requirement shall not apply to airfields for the outside storage of aircraft.

Sec. 54-2-5.7. - Airport and Industrial Facilities District (AI).

(a) *Intent.* The intent of the AI District is to provide a management framework for implementing comprehensive plan objectives and policies for airport facilities and supportive light industrial activities and related development within lands designated IN on the future land use map. In addition, the district shall implement the policies of the City of Sebastian Airport Master Plan. Performance criteria within the land development code requires that land use and development within and adjacent to the Sebastian Airport avoid encroaching upon the airport hazard zone. Furthermore, land uses proposed within noise impact areas defined in the FAA noise control regulations shall comply with FAA guidelines for managing noise impacts through land use regulation. The airport district regulations establish the permitted uses and applicable restrictions within the air operations area. The Federal Aviation Administration (FAA) regulations shall govern the land use, specifications, and placement of structures within the airport operations area. All development in the AI District shall comply with the comprehensive plan, performance criteria in chapter III, section 54-2-7.12, Airport height limitations, article XVIII, Site Plan Review Procedures, as well as other applicable land development regulations.

(b) *Uses permitted:*
Airports and related uses

Fixed base operators

reflect best management principles and practices of urban design, including streetscape amenities and recreation facilities which promote a harmonious and aesthetic environment for residents within the proposed development. This requirement shall be enforced in order to implement the purpose and intent of the PUD(R) and section 54-4-20.1(c).

Sec. 54-2-5.12. - Commercial Planned Unit Development (PUD-C).

(a) *Intent.* The objective of this zoning district is to establish regulatory standards for controlling the location of comprehensively planned commercial centers accessible to arterial roadways. The PUD(C) is intended to incorporate a flexible management policy that incorporates urban design amenities, including streetscape improvements, and fosters innovative master planning in the design and development of commercial centers. The PUD(C) District provides a diversified mix of permitted and conditional land uses and higher standards of land planning and site design than are available under conventional zoning categories. All planned unit developments shall be designed and administered consistent with the criteria and administrative procedures in article XX, Planned Unit Development, and shall comply with all provisions of the land development code, including but not limited to: article VII, General Regulations; chapter III, Performance Criteria; article XVIII, Site Plan Review; article XIX, Subdivision and section 54-2-5.10

(b) *Compliance with comprehensive plan and future land use map.* A commercial PUD must comply with the provisions of the Sebastian Comprehensive Plan. In addition to meeting the performance criteria set forth in this section, all land contained within a commercial PUD must have one of the following underlying comprehensive plan future land use map designations: 1) Commercial Limited (CL); 2) Commercial General (CG); or Riverfront Mixed Use (RMU).

(c) *Location and size.* A commercial PUD shall have frontage on a primary arterial roadway, as designated on the City of Sebastian Major Thoroughfare Plan. At the time an application for the PUD(C) is submitted and approved by the city, the property included in the proposed PUD(C) shall have a minimum of 25 contiguous acres under unified control as required pursuant to section 54-4.20.1(b).

(d) *Land use mix.* The specific land use mix within a PUD(C) District development shall be determined by the underlying comprehensive plan future land use map designations. The location of the various land uses shall be determined during the review of the preliminary development plan required pursuant to section 54-4-20.3

(e) *Permitted uses.* Permitted land uses shall include those land use activities cited below which are determined to be consistent with the underlying comprehensive plan future land use map designation and shall be permitted by right within an approved PUD(C) development plan.

(1) Commercial limited land use designation. The following principal land uses, as well as all accessory uses thereto, are permitted uses within those areas, if any, of a commercial PUD having a Commercial Limited (CL) comprehensive plan future land use map designation:

a. Community facilities. Limited to the following:

1. Administrative services (public or private not for profit).
2. Clubs (public or private not for profit).
3. Cultural or civic activities.
4. Protective services.
5. Utilities, public and private.

b. Business and professional offices.

c. Commercial retail ;lte; 5,000 sq. ft.

d. Restaurants, excluding drive-through facilities and fast food service.

(2) Commercial general land use designations. Those areas, if any, of commercial PUD(s) having an underlying comprehensive plan future land use map designation of Commercial General (CG) shall be permitted to have the same permitted and conditional uses as provided for in section 54-2-5.3.3 Commercial General (CG) District.

(3) Riverfront mixed use designations: Those areas, if any, of commercial PUD(s) having an underlying comprehensive plan future land use map designation of Riverfront Mixed Use (RMU) shall be permitted to have the same permitted and conditional uses as provided for in section 54-2-5.4 Commercial Riverfront and section 54-2-5.5 Commercial Waterfront Residential.

(f) *Conditional uses.* Conditional uses shall include those land use activities cited below which are: (1) consistent with the comprehensive plan future land use map designation; and (2) comply with all criteria and procedures of article VI, Conditional Uses, and all other applicable laws and ordinances. The planning and zoning commission shall determine if such conditions and provisions are satisfied. Appeal of such decisions shall be heard by the city council. All conditional uses allowed within a Commercial Limited (CL), Commercial General (CG) or Commercial Riverfront (CR) or Commercial Waterfront Residential (CWR) zoning district may be approved as conditional uses within the PUD (C) provided that the uses comply with the above cited regulations and conditional use approval procedures of article VI.

(1) Residential development. Residential development may be approved as a conditional use in the PUD-C District if such residential development is permitted within the underlying comprehensive plan future land use map designation. In addition, the residential use must comply with the

condition use criteria of article VI, the specific criteria below stated and all other applicable laws and ordinances:

a. Residential development shall be allowed along the perimeter boundaries of the proposed development as a buffer from adjacent off-site residential developments as well as from undeveloped adjacent areas off site which are zoned for residential development.

b. The total land area proposed for residential development shall not exceed 25% of the total land area of the proposed PUD(C) site.

c. The maximum density shall not exceed eight dwelling units per acre. This density shall not be permitted as a matter of right but rather the actual density shall be as determined during review of the preliminary development plan pursuant to the provisions of section 54-4-20.3. No credit shall be given for land used for nonresidential purposes in calculating density.

d. Residential structure types shall be compatible with surrounding residential development.

e. A minimum of 50% of the total land area proposed for residential development shall be preserved as open space.

(2) *Light industrial development.* Light industrial development may be allowed only in those areas, if any, of a commercial PUD zone having a future land use classification of Commercial General (CG). The total land area proposed for light industrial development shall not exceed 50% of the total developable land area with a general commercial land use designation.

a. All such uses shall comply with all performance standards within this code and shall take place within wholly enclosed buildings.

b. Light industrial development within a commercial PUD(C) shall be limited to the following conditional uses:

1. The manufacturing, compounding, processing, packing, or assembly of small electrical items, components, or circuitry, jewelry, musical instruments, toys, novelties, and other similar items that are dependent on component parts or raw materials manufactured elsewhere.
2. Schools, offices, laboratories and other such facilities.
3. Motion picture production studios; professional, scientific, photographic or optical instrumentation facilities.
4. Printing, engraving, and related reproduction processes.
5. Publishing or distribution of books, newspapers or other similar printing facilities.
6. Mini-storage.

(g) *Perimeter transition area.* All uses shall conform to the purposes of the Commercial Planned Unit Development District and shall be compatible with all uses, existing or proposed in the vicinity of the area covered by the proposed planned development. Where this section is found to be more restrictive than other provisions within the City Code of Ordinances, this section shall be the controlling regulation.

(1) Compatibility with adjacent residential property. No structure proposed for commercial use shall be constructed within 100 feet of adjacent or abutting property zoned for residential development.

(2) Compatibility with adjacent nonresidential property. In those cases where the property line does not abut and is not adjacent to residential development or residentially zoned land, the minimum setback shall be determined as part of the preliminary development plan review. No buildings shall be located within 40 feet of the outer boundary of the PUD districts excepting entryway security buildings and structures approved by the city council.

(h) *Size and dimension regulations.* The intent of the PUD(C) is to offer greater flexibility in the design of innovative large scale commercial development and to accommodate amenities generally not found in conventional development. The location, size, dimensions and design of yards, building setbacks, points of vehicular access, parking areas, building characteristics, and all other site improvements shall provide for:

- Safe and convenient internal vehicular circulation, including access and sufficient area for effective delivery of emergency services such as fire protection;
- Buildings with safe entry and exit from the front and rear of respective buildings; and
- Convenient, well landscaped and designed pedestrian ways and open space systems.

(1) PUD Commercial size and dimension criteria.

a. Minimum lot size. No individual minimum lot size shall be required within a Commercial Planned Unit Development.

b. *Floor area ratio(FAR).* The FAR shall not exceed 60% west of Indian River Drive and shall not exceed 40% east of Indian River Drive. The FAR shall comply with section 54-2-5.10(b) provisions for mixed-use development.

c. Frontage requirements. All land use activities within a PUD(C) shall have access to a public street.

d. Setbacks. There are no required setbacks or yards within the Commercial Planned Unit Development except as otherwise provided for herein.

e. Distance between buildings. There shall be a minimum of 20 feet separating structures, excepting buildings with immediately adjoining or common walls. However, the minimum

TOWN OF MALABAR

PLANNING AND ZONING

AGENDA ITEM REPORT

AGENDA ITEM NO: 6
Meeting Date: August 24, 2011

Prepared By: Denine M. Sherear, Planning and Zoning Board Secretary

---

SUBJECT: Continue to Work on Requirements for Assisted Living

---

BACKGROUND/HISTORY:
This is continued discussion from the last P & Z Meeting to work on requirements for Assisted Living in the Town of Malabar.

ATTACHMENTS:

- **Bring Packets from July 27,2011 Meeting concerning this Agenda Item**

ACTION OPTIONS:
Board research on F.S. requirements and Florida Building Code requirements.